Town
Of
Ridgeland
South Carolina

STANDARD SPECIFICATIONS FOR WATER AND SEWER SYSTEMS

JUNE 2009

SCDHEC Approved
July 28, 2009

CONTENTS

SECTION 1	AUTHORIZATION AND APPLICATION
SECTION 2	PLAN REVIEW AND PROJECT ACCEPTANCE
SECTION 3	WATER SYSTEM
SECTION 4	GRAVITY SEWER SYSTEM
SECTION 5	SEWER PUMP STATIONS
SECTION 6	SEWER FORCE MAINS
SECTION 7	EXCAVATION, TRENCHING, AND BACKFILL
SECTION 8	JACK AND BORE CROSSINGS
SECTION 9	SAND OIL AND GREASE SEPARATOR

PLAN REVIEW, PROJECT FEES, AND PROJECT ACCEPTANCE

In order to aid and expedite the review, approval, and acceptance of new water distribution and sanitary sewer collection extensions, the Town of Ridgeland (hereafter referred to as the "Town") has provided the following guidelines. The process is divided into three sections: Preliminary Plan Review, Plan Approval, and Final Project Acceptance.

I. GENERAL

a. It is the responsibility of the Developer to secure all necessary permits for all projects submitted to the Town for review. Copies of all applicable permits shall be provided to the Town. These permits shall include, but are not limited to US Army Corps of Engineers, Ocean and Coastal Resource Management (OCRM), and the South Carolina Department of Health and Environmental Control (SCDHEC).
b. All developments served by public sewer shall be served with public water.
c. All connections to the existing Town systems must be approved and inspected by Town personnel.
d. No water or sewer system shall be placed into service until the applicable SCDHEC Permit to Operate has been received by the Town.
e. The Town shall have exclusive retail rights.
f. Submittal packages shall be sent to the Town as follows:

Town of Ridgeland
PO Box 1119
One Town Square
Ridgeland, SC 29936
Attention: R. Gregory Rushing, PE

g. Allow four (4) weeks for review.

II. CAPACITY AND TAP FEES

a. The Developer shall pay all applicable capacity and tap fees prior to issuance of any service commitments by the Town.
b. Capacity fees shall be calculated by Residential Equivalency Units (REUs). One REU shall be equal to 300 gallons per day of sewer loading.
c. Capacity fees are calculated using SCDHEC's Contributory Loading Schedule, Regulation 61-67, Appendix A unless specifically addressed by the following chart:

Single Family Residence	1 Residential Equivalency Unit (REU)
Apartments	1 REU per Apartment
Hotel / Motel (no restaurant)	1 REU per 4 rooms
Laundry	1 REU per machine
Restaurant	1 REU per 10 seats
Restaurant (24 Hours)	1 REU per 5 seats
Bar / Tavern	1 REU per 10 seats
Offices	1 REU per 16 employees
Shopping Centers / Retail	1 REU per 2000 square feet of floor space
Grocery Stores (no restaurant)	1 REU per 2000 square feet of floor space
Car Wash	1 REU per bay
Beauty Shop	1 REU per 3 chairs

d. Capacity fees are as follows:
   i. Residential Water Capacity
      1. In-Town $1,000 per REU
      2. Out-of-Town $1,500 per REU
   ii. Residential Sewer Capacity
      1. In-Town $2,100 per REU
      2. Out-of-Town $2,700 per REU
   iii. Commercial Water Capacity
      1. In-Town $1,050 per REU
      2. Out-of-Town $1,350 per REU
   iv. Commercial Sewer Capacity
      1. In-Town $2,100 per REU
      2. Out-of-Town $2,700 per REU

e. The Town reserves the right to withdraw capacity commitments upon a 30-day notice for any reason.
f. The Developer may not transfer capacity from a third party without the written permission of the Town.
g. The Town retains the right to repurchase capacity at the purchase price.
h. Tap fees shall be as follows:
   i. Water Tap
      1. 3/4" Service
         a. In-Town $500 per REU
         b. Out-of-Town $875 per REU
      2. 1” Service
         a. In-Town $800 per REU
         b. Out-of-Town $1,400 per REU
      3. 2” Service

a. In-Town $1,500 per REU
b. Out-of-Town $2,625 per REU

4. 3” Service
a. In-Town $2,500 per REU
b. Out-of-Town $4,375 per REU

ii. Residential Sewer Tap
1. In-Town $500 per unit
2. Out-of-Town $875 per unit

iii. Commercial Sewer Tap
1. $500 per REU

III. ENGINEERING REVIEW FEES

a. An engineering review fee shall be paid in addition to capacity and tap fees.
b. Engineering Review Fees shall be as follows:
i. 5 REUs or less - $1500
ii. Greater than 5 REUs - $1000 + $150 x REUs
iii. Multiple Review
1. Should any project require multiple reviews or significant modification, additional fees may be applied as determined by Town Staff

IV. PRELIMINARY PLAN REVIEW

a. Pre-Design Meeting - Developers, Designers, Planners, Engineers, and any others associated with any development project shall meet with selected Town Staff, including but not limited to, the Director of Engineering and the Water and Sewer Superintendent, prior to submission of any proposed plans.
b. The Developer’s Design Engineer shall submit a preliminary review package at any time after the pre-design meeting. This package shall include:
i. Two (2) sets of plans
ii. Two (2) sets of specifications
iii. Two (2) sets of design considerations and calculations
c. All submitted plans shall show all development improvements proposed, including pump stations, water mains, sewer mains, storm drainage, roadway improvements, lateral connections, and all dry utilities.

V. FINAL PLAN APPROVAL

a. Upon completion of the preliminary review, the Developer's Design Engineer shall submit a Final Review Package show all indicated corrections requested by the Town.
b. Upon payment of all fees and approval of the plans, the Town shall issue its capacity and service commitments for submission to SCDHEC in order to obtain the applicable Construction Permits.

VI. PRECONSTRUCTION ACTIVITY

a. Preconstruction Conference – Following receipt of all applicable permits, the Developer's Design Engineer shall schedule a preconstruction meeting with Town Staff. No construction activity shall begin prior to this meeting. It is the responsibility of the Developer to see that all applicable parties attend the meeting. The following entities shall be present this conference:
    i. Developer
    ii. Design Engineer
    iii. Prime Contractor
    iv. Subcontractor for water and sewer
    v. Dry utility representatives
        1. Electric
        2. Communications
        3. Television
b. Shop Drawings – Shop drawings shall be submitted to the Town for review. The Developer's Design Engineer shall review the submittals prior to review by the Town. The Developer's Engineer shall provide a complete listing of all submittals, review dates, resubmittals, and comments and provide this listing with all packages given to the Town.
    i. Two (2) copies of all submittals shall be retained by the Town.
    ii. Submittals shall be legible and of sufficient scale to show all pertinent aspects of the item in question.
    iii. Installation of equipment or materials not previously approved by the Town shall not be allowed. Any materials rejected by the Town after installation shall be removed from site.
c. Notice of Construction Activity – The Developer's Contractor shall issue to the Town a Notice of Construction Activity seven (7) days prior to starting construction.

VII. FINAL PROJECT ACCEPTANCE

a. Upon completion of construction, the Developer's Design Engineer shall:
    i. Submit to the Town a written request for final inspection.

ii. Certify in writing that the water and sewer systems have been constructed in accordance with Town-approved plans, specifications, applicable permits, and good engineering practice.

iii. Certify that all construction is to final grade within two-tenths (0.2) of a foot.

iv. Certify that all testing has been completed successfully and provide records of all testing for water and sewer. These test shall include, but not be limited to, the following:

1. Water pressure tests.
2. Water bacteriological tests.
3. Gravity Sewer air pressure tests.
4. Gravity Sewer lamping and mandrel tests.
5. Sewer Force Main pressure tests.
6. Sewer Pump Station drawdown tests with pressure readings and electrical information.

v. Provide four (4) copies of applicable Operation and Maintenance Manuals for any equipment.

vi. Provide to the Town record drawings as follows:

1. One (1) digital copy AutoCAD drawings on the South Carolina State Plane Coordinate System.
2. One (1) copy of all data via ESRI GIS software shapefiles.
3. Two (2) sets of printed and stamped drawings.
4. Show station marks at all valves, manholes, hydrants, blow-offs, and service laterals.
5. All valves shall be located by distance to two permanent reference points.
6. Service laterals shall be located by distance from adjacent permanent property corners.
7. Indicate top elevation and invert elevation of all manholes. Indicate elevation of all pipes not tying directly to the invert.
8. Provide location of all “dry” utilities.
9. Provide final gravity sewer and force main profiles.
10. All elevations shall reference the National Geodetic Vertical Datum of 1929 (NGVD29).
11. Provide all plat and easement information.
12. Hand drawings will not be accepted.
13. Town Staff shall verify the accuracy of the record drawings prior to acceptance of the project. Should any errors or omissions be noted all information shall be returned to the Developer’s Design

Engineer for correction. No project shall be accepted for operation until final record drawings are approved.

b. Upon completion, the Developer shall:
    i. Provide the Town an instrument of conveyance conveying the constructed system to the Town free and clear of all liens and indicating that the system shall thereafter be owned, operated, and maintained by the Town.
    ii. Provide the Town a copy of all easements for the water and sewer systems and proof that these easements have been recorded.
    iii. Provide the Town an irrevocable one (1) year guarantee of all construction completed as signed by the General Contractor and any applicable utility subcontractors.
    iv. Provide the Town an itemized list of all installed materials.
    v. Provide the Town a letters of value for all installed materials separating water, sewer, and pump station items.
    vi. Provide the Town a letter certifying that all applicable fees and contracts have been satisfied.
c. "Dry" Utilities must be installed prior to acceptance of the project. These utilities shall include, but not be limited to, the following:
    i. Power
    ii. Telephone
    iii. CATV
d. All above items must be completed to the satisfaction of Town Staff prior to acceptance of the project. Upon completion, Town Staff shall issue a letter to SCDHEC accepting the system for operation and maintenance.
    i. If for any reason, SCDHEC does not issue its Permit to Operate within thirty (30) days of the Town's Acceptance, Town Staff reserves the right to review all applicable documentation and rescind any acceptance.
e. No connections shall be allowed to active Town systems until receipt by the Town of SCDHEC's Permit to Operate. Until this permit is received:
    i. Plugs shall be installed in all gravity sewer connections.
    ii. All water valves adjacent to active systems shall be closed.
f. Upon receipt of SCDHEC's Permit to Operate, Town Staff shall witness the following:
    i. Removal of all gravity sewer plugs.
    ii. Opening of all water system valves.
    iii. Flushing of all new fire hydrants.
    iv. Application of electrical power and operation of all sewer pump stations.

WATER DISTRIBUTION SYSTEM

PART 1 DESIGN GUIDELINES

A. GENERAL

a. The following water system design guidelines are based on Federal, State, and local health requirements and the Town of Ridgeland's engineering design criteria.
b. Design criteria not indicated herein shall comply with "Ten States Standards" where applicable.
c. All installations are to meet the bacteriological and chemical quality standards of the South Carolina Department of Health and Environmental Control (SCDHEC).
d. These design guidelines are applicable to all developments including, but not limited to, residential, commercial, and industrial developments and subdivisions requiring water service from the Town of Ridgeland.

B. SYSTEM DESIGN CRITERIA

a. Design data and calculations shall include the following:
    i. Maximum Instantaneous Flow. Refer to Ameen's Table XXI.
    ii. Number and type of proposed connections.
    iii. Fire flow requirements. This shall be equal to 500 GPM + 1/5 of the maximum instantaneous flows.
    iv. Fire flow test results, conducted in the last 12 months, at a location near the proposed connection to the existing system. These results shall include static and residual pressures for a known flow rate and the time and date of the test.
    v. Design head loss calculations, including elevation changes, shall show 25 psi minimum residual pressure when either instantaneous demand occurs or when the flushing flow in excess of peak hourly flow occurs, whichever is greater.
b. No extension shall be made of an existing line when the existing line does not meet the flow and minimum pressure requirements.
c. Minimum size water mains for providing fire protection shall be 6 inches in diameter. Larger mains shall be required if necessary to allow the withdrawal of the required fire flow while maintaining the minimum residual pressure.
d. Line extensions shall not be made when the existing line does not meet the minimum pressure and flow requirements specified in SCDHEC regulation section R.61-58.4.D.(4)(a).

e. Dead ends shall be minimized by looping of all water mains, whenever practical. Provide calculations showing sufficient flow on all lines to avoid stagnation and to maintain proper chlorine residual.
f. All distribution mains shall be a minimum of 6 inches in diameter. Lines less than 6 inches in diameter shall be approved only on a case-by-case basis.
g. Provide a readily accessible means of flushing all water mains at a minimum velocity of 2.5 feet per second and maintain residual pressure of 25 pounds per square inch.
h. All dead-end lines shall provide a fire hydrant at the end for flushing purposes.
i. No flushing devices shall be connected to any sanitary sewer systems.
j. Sufficient valves shall be provided on water mains so that customer inconvenience and sanitary hazards will be minimized during repairs.
k. Valves are required at all intersections and loops.
l. Standard hydrants shall not be connected to lines that cannot provide sufficient fire flows.
m. Water services and plumbing must conform to relevant local plumbing codes or the National Plumbing Code.
n. Individual home booster pumps are not allowed to meet the 25 psi minimum pressure at the service location.
o. Water Loading Stations – To prevent contamination of the public water supply, the following criteria must be met:
    i. Air Gap – A device must be installed on the fill line to provide an air break and prevent a submerged discharge line.
    ii. Hose Length – The fill hose and cross connection control device must be constructed so that when hanging freely it will terminate at least 2 feet above the ground surface.
    iii. Fill Line Terminus – The discharge end of the fill line must be unthreaded and constructed to prevent the attachment of additional hose, piping, or other appurtenances.
p. All lines must comply with the requirements of SCDHEC and the Ridgeland Fire Department.
q. Hazen-Williams design coefficients shall be:
    i. PVC: C=140
    ii. Ductile iron: C=120
r. Air relief valves shall not be allowed on the water system. If necessary, hydrants shall be placed at high points in the system to expel air.
s. Chambers, pits, or manholes containing valves, blow-offs, meters, or other such appurtenances to the distribution system shall not be connected directly to any storm drain or sanitary sewer.

t. Water mains shall be located out of contaminated areas, unless using pipe materials that will protect (i.e., DIP with chemical resistant gaskets). Re-routing the water line if possible.
u. Sewer Manholes: No water pipe shall pass through or come in contact with any part of a sewer manhole. Water lines may come in contact with storm sewers or catch basins if there is no other practical alternative, provided that ductile iron is used, no joints of the water line are within the storm sewer or catch basin and the joints are located as far as possible from the storm sewer or catch basin.
v. Potable water lines shall not be laid less than 25 feet horizontally from any portion of wastewater tile-field or spray field, or shall be otherwise protected by an acceptable method approved by the Department.
w. Above-water crossings: The pipe shall be adequately supported and anchored, protected from damage and freezing, accessible for repair or replacement. (R.61-58.4.D.(13)(a)).
x. Underwater crossings: A minimum of 2 feet of cover shall be provided over the pipe. When crossing water courses that are greater than 15 feet in width, the following shall be provided:
    i. The pipe material and joints shall be designed appropriately.
    ii. Valves shall be located so the section can be isolated for testing or repair; the valves (on both sides of crossing) shall be easily accessible and not subject to flooding.
    iii. A blow-off shall be provided on the side opposite the supply service sized in accordance with Section R.61-58.4.(D)(7). Direct away from streams, over ground.
    iv. Use DIP with mechanical joints for any lines being installed in rock.
y. Cross Connection Control (Backflow Prevention Devices):
    i. There shall be no connection between the distribution system and any pipes, pumps, hydrants, or tanks whereby unsafe water or other contamination materials may be discharged or drawn into the system.
    ii. No by-passes shall be allowed, unless the bypass is also equipped with an equal, approved back-flow prevention device.
    iii. High hazard category cross connections shall require an air gap separation or an approved reduced pressure backflow preventor.
    iv. Reduced pressure principal backflow prevention assemblies shall not be installed in any area location subject to possible flooding. This includes pits or vaults, which are not provided with a gravity drain to the ground's surface that is capable of exceeding the discharge rate of the relief valve. Generally, if installed in a pit, the drain line shall be 2 times the size of the line entering the backflow prevention device. The drain cannot empty into

any type of ditch, storm drain, or sewer, which could flood water back into the pit.

v. All piping up to the inlet of the backflow prevention device must be suitable for potable water. The pipe must be AWWA or NSF approved. Black steel pipe cannot be used on the inlet side of the device.

vi. Fire line sprinkler systems and dedicated fire lines, except those in the high hazard category, shall be protected by an approved double check valve assembly.

z. Pressure and leakage tests must be conducted in accordance with AWWA Standards C600. The pressure must be at least 1.5 times the maximum working pressure at the point of testing for at least two (2) hours.

aa. All visible leaks shall be repaired regardless of the amount of leakage.

bb. Disinfection Requirements:

i. The contractor or owner shall collect a minimum of two (2) samples from each sampling site for total coliform analysis. The number of sites depends on the amount of new construction but must include all dead-end lines, be representative of the water in the newly constructed mains, and shall be collected a minimum of every 1,200 linear feet.

ii. Prior to sampling, the chlorine residual must be reduced to normal system residual levels or be nondetectable in those systems not chlorinating.

iii. These samples must be collected at least twenty-four (24) hours apart and must show the water line to be absent of total coliform bacteria.

iv. The chlorine residual must also be measured and reported.

v. If the membrane filter method of analysis is used for the coliform analysis, non-coliform growth must also be reported.

vi. If the non-coliform growth is greater than eighty (80) colonies per one hundred (100) milliliters, the sample result is invalid and must be repeated.

vii. All samples must be analyzed by a State certified laboratory.

cc. Blow-off details must be included and the following must be shown:

i. Blow-offs should be located in a box or other structure to facilitate proper use. The orifice should be provided on the fixed piping, in the valve box.

ii. Blow-offs should not be directed towards roads or so that the water will flow into creeks, etc. At stream crossings direct away from streams, over ground.

iii. Orifice sized as follows:

Pipe Diameter:	Minimum Flow Required:	Orifice Size:
2 inch	25 gpm	0.75 inch
2.5 inch	40 gpm	1 inch
3 inch	60 gpm	1.25 inch

4 inch	100 gpm	1.5 inch
6 inch	220 gpm	2 inch
8 inch	400 gpm	2.5 inch
10 inch	612 gpm	Fire Hydrant
12 inch	882 gpm	Fire Hydrant
14 inch	1200 gpm	Special Blow-off
16 inch	1570 gpm	Special Blow-off

C. FIRE HYDRANTS

a. All fire hydrants shall comply with the Town of Ridgeland Fire Code.
b. Fire hydrants shall be spaced, at a minimum, every 1,000 feet or at every intersection.
c. Fire hydrant leads shall be a minimum of 6 inches in diameter with and isolation valve.

D. SIZING OF LINES

a. Pipe size shall be 6 inches in diameter or larger.
b. Design for flushing velocities per SCDHEC regulations.
c. Minimum design residual pressure shall be 20 psi.
d. The Developer's Design Engineer is to determine available static and residual pressures at the delivery point for the water to a new development. The data is to be obtained under the direction of an engineer registered in the State of South Carolina.

E. VALVES

a. Provide 3 valves for all tee intersections.
b. Provide 4 valves for all cross intersections.
c. Maximum valve spacing shall be 1,000 feet.

F. INDUSTRIAL OR SPECIAL DESIGN CONDITIONS

a. Design of water systems for industrial or other systems not covered under this section shall be approved on a case-by-case basis.

G. DEAD ENDS

a. Minimize dead end lines by looping of all mains.
b. Where dead end lines occur provide a fire hydrant at the terminus.
c. Do not connect any flushing devices to any sanitary sewer.

H. SEPARATION OF WATER AND SEWER MAINS

a. Where possible, locate water mains at least 10 feet away, horizontally, for sewer pipes.
b. Should 10 feet not be practical, then the water main may be located closer provided:
    i. It is laid in a separate trench.
    ii. It is laid in the same trench with the water main located one side of a bench of undisturbed earth.
    iii. In either above case, crown elevation of the sewer shall be at least 18 inches below the invert elevation of the water line.
    iv. In all cases, regardless of vertical separation, the proposed water line shall be ductile iron pipe.

I. THRUST BLOCK DESIGN
a. Maximum soil pressure shall be 2000 lbs/sqft.
b. Minimum water pressure shall be 150 psi.
c. Thrust blocks shall only be used where restrained joint fittings are not practical.

J. COVER
a. Provide suitable cover on all distribution mains. Minimum cover depth shall be as follows:
    i. Less than 8 inches in diameter: 30 inches.
    ii. 8 inches to 12 inches: 36 inches.
    iii. 14 inches and larger: 48 inches.
    iv. All piping located within the rights-of-way of the South Carolina Department of Transportation shall have a cover as indicated above or 36 inches below the elevation of the road, whichever is greater.
b. Special conditions other than those listed may be approved if requested in writing.

K. DUCTILE IRON PIPE LOCATIONS
a. Use ductile iron pipe on proposed water mains where:
    i. 16 inches in diameter or larger.
    ii. Water mains cross sewer lines, above or below, regardless of clearance.
    iii. Water mains cross storm drainage lines, above or below, regardless of clearance.
    iv. Water mains cross creeks, rivers, or other water bodies.
    v. Water mains are installed in casing.
    vi. Cover is less than indicated above.

WATER DISTRIBUTION SYSTEM
PART 2 MATERIALS FOR CONSTRUCTION

A. GENERAL

a. All materials or products which come in contact with drinking water shall be third-party certified as meeting the specifications of the American National Institute / National Sanitation Foundation Standard 61, Drinking Water System Components – Health Effects. The certifying party shall be accredited by the American National Standards Institute.
b. All pipe, fittings, packing, jointing materials, valves, and fire hydrants shall conform to Section C of the American Water Works Association (AWWA) Standards.
c. Water mains which have been previously used for conveying potable water may be reused provided they meet applicable criteria from AWWA Section C, ANSI/NSF 61, and ASTM D1785 or D2241. The mains must be thoroughly cleaned and restored practically to their original condition.
d. Asbestos cement pipe shall not be used.
e. Thermoplastic pipe shall not be used above grade.
f. Steel pipe shall not be used.
g. Natural rubber or other material which will support microbiological growth shall not be used for any gaskets, O-rings, and other products used for jointing pipes, setting meters or valves, or other appurtenances which will expose the material to the water.
h. Lubricants which support microbiological growth shall not be used for slip-on joints.
i. The use of vegetable shortening is prohibited.
j. The use of solvent-weld PVC pipe and fittings in water mains 4 inches and larger is prohibited.
k. Any pipe, solder, or flux which is used in the installation or repair of any public water system, used in any plumbing which provides water through the connection to the public water system, for human consumption, shall be lead free. Lead free, for solder and flux, means those containing not more than 0.2% lead. Lead free, for pipes and pipe fittings, means those containing not more than 8.0% lead. Leaded joints necessary for the repair of CIP shall be exempt for the above.

B. PRODUCTS

a. PIPE

i. Ductile Iron Pipe – Shall conform to ANSI A21.50 (AWWA C-150) latest revisions and ANSI A21.51 (AWWA C-151) latest revision. Ductile iron pipe shall be of the thickness according to ANSI/AWWA C150/A21.50, latest revision, for Laying Condition 2, and shall be Class 50 minimum. It shall be cement lined in accordance with ANSI A21.4 or AWWA C-104.

ii. Plastic Pipe – Shall be PVC Class 150, DR 18, C-900 for 12" and smaller

and Class 165, DR 25, C-905 for 14" and larger. All pipe shall conform to ASTM D-2241 and be installed in accordance with ASTM D-2321. Joints shall be in accordance with ASTM D-3036. Sizes and dimensions shall be as follows:

150 PSI, DR 18, C-900			165 PSI, DR 25, C-905		
Nom. Pipe Size	O.D. (in.)	Min. Wall Thickness (in.)	Nom. Pipe Size	O.D. (in.)	Min. Wall Thickness (in.)
4"	4.800	0.267	14"	15.300	0.612
6"	6.900	0.383	16"	17.400	0.696
8"	9.050	0.503	18"	19.500	0.780
10"	11.100	0.617	20"	21.600	0.864
12"	13.200	0.733	24"	25.800	1.032
			30"	32.000	1.280
			36"	38.300	1.530

All PVC pipe less than 2" diameter shall be schedule 40 unless otherwise noted.

Pipe shall bear the National Sanitation Foundation seal of approval and shall comply with the requirements of Type I, Grade I (PVC 1120) of the ASTM resin specification D-1784 (AWWA C 151-76). Certificates of conformance with the foregoing specifications shall be furnished with each lot of pipe supplied. Plastic pipe shall be jointed by means of a rubber ring bell joint which shall be an integral part of the barrel or solvent welded at the factory. The joints shall have a space to provide expansion and contraction of the pipe without leaking. Fittings for plastic pipes shall be PVC with ring tite rubber joints; or ductile iron with adapters to PVC pipe.

The bell shall consist of an integral wall section with a bounded-in solid cross section shall be designed to be at least as hydrostatically strong as the pipe wall and meet the requirements of UNI-BELL-B-11.

Each standard and random length of pipe shall be tested to two times the rated pressure of the pipe for a minimum of 5 seconds. The integral bell shall be tested with the pipe.

iii. PVC Schedule 40 and 80 Pipe – Shall conform to ASTM 1785.

b. JOINTS

i. Flanged Joints – Shall conform to ANSI A21.15 (AWWA C-115) latest revision. Bolts shall conform to ANSI B18.2.1 and nuts shall conform to ANSI B18.2.2. Gaskets shall be rubber, either ring or full face, and shall be 1/8 inch thick. Gaskets shall conform to the dimensions recommended by AWWA C-115 latest revision.

ii. Mechanical Joints – In ductile iron pipe shall conform to ANSI A21.11 (AWWA C-111) latest revision.

iii. Push-On-Joints – In ductile iron pipes shall conform to ANSI A21.11 latest revision.

iv. Plastic Pipe – Joints in plastic pipe 4-inches and larger shall meet all requirements of AWWA C-900 latest revision. Joints in plastic pipe with a diameter less than 4-inches shall conform to ASTM D-3139 latest revision.

v. Restrained Joints – Restrained joints for pipe, valves and fittings shall be mechanical joints with ductile iron retainer glands or push-on type joints equivalent to "Lok-Ring", "TR Flex", or "Super Lock" and shall have a minimum rated working pressure of 250 psi. The joints shall be in accordance with the applicable portions of AWWA C111. The manufacturer of the joints shall furnish certification, witnessed by an independent laboratory, that the joints furnished have been tested at a pressure of 500 psi without signs of leakage or failure. Restrained joints shall be capable of being deflected after assembly.

c. FITTINGS

i. Fittings for Ductile Iron – Shall be short body ductile iron, manufactured in accordance with ASA 21.53 (AWWA C-153) latest revision. They shall be cement lined in accordance with ANSI A-21.4 (AWWA C-104) latest revision. Fittings shall be designed to accommodate the type of pipe used.

ii. Fittings for Flanged Pipe – Shall be manufactured in accordance with ASA B 16.1, Class 125 flanges.

iii. Fittings for PVC Pipe – Less than 4" shall be PVC with ring tite rubber joints or solvent weld joints. PVC Fittings 4" and larger shall not be allowed.

iv. Fittings for Schedule 40 – shall conform to ASTM D-2466

v.

vi. Fittings for Schedule 80 – socket fittings shall conform to ASTM D-2467 and ASTM D-2464, for threaded fittings.

vii.

viii. Restrained joint fittings and accessories shall be Megalug or approved

equivalent.

d. POLYETHYLENE ENCASEMENT

i. Polyethylene encasement shall be in tube form conforming to the requirements of ANSI/AWWA C105/A21.5 latest revision. The polyethylene film shall have the following characteristics:

Tensile Strength	1,200 psi minimum
Elongation	300 percent minimum
Dielectric Strength	800 V/mil thickness minimum
Thickness	Normal thickness of .0008 in. (8 mil.)

Polyethylene encasement shall be installed on ductile iron piping, fittings, and valves below grade.

e. GATE VALVES

i. All buried gate valves shall meet the requirements of AWWA C500 or C509.
Valves shall be rated for 150 psi minimum working pressure and a minimum 300 psi test pressure.
Valves shall be of the iron body, bronze mounted, double disc, parallel seat, non-rising stem type fitted with "O-Ring" seals.
The operating nut shall be standard AWWA 2-inch square.
Gate valves shall open left or counterclockwise.
Gate valves shall be Clow Corporation AWWA Double Disc Gate Valves, equal by American Darling, or equal. Mueller or AVK

ii.

f. TAPPING SLEEVES AND GATE VALVE

i. Tapping sleeve
1. Shall be Type 304 stainless steel with stainless steel flanged outlet.
2. Shall have a full circumferential gasket.
3. Shall have a working pressure of 150 psi.
4. Shall have Type 304 stainless steel nuts and bolts.
5. Shall have a 3/4 inch NPT test plug.
6. Acceptable Products: JCM 432, ROMAC SST3, or approved equal.

ii. Tapping Valve
1. Shall be constructed of material compatible with tapping sleeve. Valve shall conform to specifications for valves above.

g. BALL VALVES FOR PVC PIPE

i. Ball valves for PVC pipe shall be of PVC Type 1 with union, socket, threaded or flanged ends as required. Ball valves shall be full port, full flow, all plastic construction, 150 psi rated with teflon seat seals, O-ring and T-handles. Valves shall be double (true) union type. PVC ball valves shall be as manufactured by Celanese Piping Systems, Inc., Wallace and Tiernan

Inc., Plastiline, Inc., or equal.

h. BALL VALVES (3-inches and smaller)
   i. Ball valves 3-in and smaller shall be bronze, or carbon steel body; full bore, fire safe, rated for pressure of 250 psi. Valve ends shall be flanged, threaded, or soldered as required. All valves furnished shall be by the same manufacturers.
   ii. The design of the valve shall provide suitable seating in both directions. To compensate for wear on the seating surfaces, the valve shall utilize a separate ball and stem design which will allow the ball to float freely under pressure against the downstream seat and seal tightly under all service conditions. The stem shall be designed to prevent blowout. Ball valves shall have Type 316 stainless steel balls and trim, RTFE seats and RTFE stem packing.
   iii. The valves shall not require lubrication but shall have stuffing boxes which can be packed with the valve in service without undue leakage.
   iv. Valves shall be furnished with lever actuator attached to each valve.
   v. Valves shall be "Apollo" series as manufactured by Conbraco Industries, Inc.

i. NEEDLE VALVES
   i. The needle valves shall have a cast bronze body and be constructed in accordance with ASTM B62 and shall be designed for an operating pressure of 125 psi and a 200 psi maximum test pressure. Ends shall be ANSI B2.1 threaded. The valves shall have a rising bronze stem and non-slip malleable iron hand wheel.
   ii. The needle valve shall be Figure 680 as manufactured by the Wm. Powell Company, Cincinnati, Ohio, or Figure 88 as manufactured by Crane Company, Valve Division, Chicago, Illinois, or equal.

j. AIR RELEASE VALVES
   i. Valves shall have a cast iron body, cover and baffle, stainless steel float, bronze water diffuser Buna-N or Viton seat and stainless steel trim.
   ii. Valves shall be provided with a vacuum check to prevent air from reentering the line.
   iii. The fittings shall be threaded.
   iv. The air release valves shall be Model 200WD as manufactured by APCO Valve and Primer Corporation, Schaumburg, Illinois; Model 45VC by Val-Matic Valve and Manufacturing Corporation, Lyons, Illinois or equal.

k. RESTRAINING CLAMPS
   i. Restraining clamp assemblies as Detailed in the Drawings for use at hydrant connections to water mains, or at fittings where shown on the Drawings, shall be as manufactured by Stellar Corporation, Columbus, Ohio; or equal.

l. YARD HYDRANTS
   i. Yard hydrants shall be 2-1/8 inch Valve Post Type A-411 as manufactured

by Mueller Company of Decatur, Illinois or equal. Yard hydrants shall have two 1-1/2 inch hose nozzles and 3-inch mechanical joint inlet connections. Operating nuts shall be standard AWWA 2-inch square and caps shall have attachment chains. Four operating wrenches of suitable size shall be furnished to operate all yard hydrants. The threads on the 1-1/2 inch outlets shall match the threads on the hose now utilized by the Owner.

m. VALVE BOXES

i. Each buried valve shall be accompanied by a valve box of the adjustable type of heavy pattern, constructed of cast iron and provided with cast iron cover.

ii. The upper section of each box shall have a flange at the bottom, having sufficient bearing area to prevent settling. The bottom of the lower section shall enclose the operating nut of the valve. Boxes shall be of lengths consistent with pipe depths as shown on the Drawings. Boxes shall be adjustable, with a lap of at least 6-inch when in the most extended position. Covers shall have the word "WATER", "SEWER" or "DRAIN" (as applicable) cast in the top.

iii. Valve boxes shall be Tyler 461S.

n. HYDRANTS

i. Hydrants shall be Kennedy Type K-11, Darling B50B "Quick-Fix" type, or equal, and shall conform to AWWA C502, and shall, in addition, meet the specific requirements and exceptions which follows: Mueller

ii. Hydrants shall be of manufacturer's standard pattern and of standard size, and shall have one (1) 4-1/2-inch pumper nozzle and two (2) 2-1/2-inch hose nozzles.

iii. Hydrant inlet connections shall have mechanical joints for 6-inch ductile-iron pipe.

iv. Hydrant valve opening shall have an area at least equal to that area of a 5-1/4-inch minimum diameter circle and be obstructed only by the valve rod. Each hydrant shall be able to deliver 500 gallons minimum through its two (2) 2-1/2-inch hose nozzles when opened together with a loss of not more than 2 psi in the hydrants.

v. Each hydrant shall be designed for installation in a trench that will provide 3-foot cover.

vi. Hydrants shall be hydrostatically tested as specified in AWWA C502.

vii. All nozzle threads shall be American National Standard.

viii. Each nozzle cap shall be provided with a Buna N rubber washer.

ix. Hydrants shall be so arranged that the direction of outlets may be turned 90 degrees without interference with the drip mechanism and without the mechanism obstructing the discharge from any outlet.

x. Hydrants must be capable of being extended without removing any operating parts.

xi. A bronze nut and check nut shall be provided to hold the main hydrant valve

on its stem.

xii. Hydrants must open by turning operating nut to left (counterclockwise) and must be marked with an arrow and word "open" to indicate the direction to turn stem to open hydrant.

xiii. All iron work to be set below ground, after being thoroughly cleaned, shall be painted with two (2) coats of asphalt varnish in accordance with AWWA C502 and iron work to be left above ground shall be shop painted with two (2) coats of paint of quality and color to correspond to the present standard of the Owner.

xiv. Each hydrant shall be designed such that the hydrant valve closes with line pressure preventing loss of water and consequent flooding in the event of traffic damage.

xv. Each hydrant shall be furnished with a steel chain holder, double steel hose cap chain, steel steamer cap chain and any other hooks.

o. CURB AND CORPORATION STOPS

i. Curb and corporation stops shall be A.Y. McDonald 6101W, Ford, Mueller, or acceptable equivalent.

ii. Curb stops shall have a locking wing.

iii. Valves shall be IPS.

p. TAPPING SADDLES

i. Service saddles shall be A.Y.McDonald 3148 or equivalent.

q. METALLIC DETECTION TAPE

i. Shall be 2" wide.

ii. Shall be 5.0 mils overall thickness.

iii. Foil shall be visible from both sides.

iv. Shall have a tensile strength of 28 lbs/inch.

v. Shall be Safety Precaution Blue.

vi. Shall indicate "Potable Water" at no greater than 24 inches on center.

r. COPPER TRACER WIRE

i. Shall be continuous 12 gauge insulated cooper tracer wire approved for direct burial.

WATER DISTRIBUTION SYSTEM

PART 3 CONSTRUCTION GUIDELINES

A. ON-SITE OBSERVATION

a. The Engineer shall have the right to require that any portion of the work be done in his presence and if any work is covered up after such instruction, it shall be exposed by the Contractor for observation. However, if the Contractor notifies the Engineer that such work is scheduled and the Engineer fails to appear within 48 hours, the Contractor may proceed without him. All work done and materials furnished shall be subject to review by the Engineer or Project Representative. All improper work shall e reconstructed and all materials which do not conform to the requirements of the specifications shall be removed from the work upon notice being received from the Engineer for the rejection of such materials. The Engineer shall have the right to mark rejected materials so as to distinguish them as such.

b. The Contractor shall give the Project Engineer or project Representative a minimum of 48 hours notice for all required observations or tests.

c. It will also be required of the Contractor to keep accurate, legible records of the location of all water lines, service laterals, valves, fittings, and appurtenances. These records will be prepared in accordance with the paragraph on "Record Data" in the Supplementary Conditions. Final payment to the Contractor will be withheld until all such information is received and accepted.

B. HANDLING MATERIALS

a. Unloading: Furnish equipment and facilities for unloading, handling, distributing and storing pipe, fittings, valves and accessories. Make equipment available at all times for use in unloading. Do not drop or dump materials. All materials dropped or dumped will be subject to rejection without additional justification.

b. Handling: Handle pipe, fittings, valves and accessories carefully to prevent shock or damage. Handle pipe by rolling on skids, forklift, or front loader. Do not use material damaged in handling.

c. Distribution: Distribute and place pipe and materials to not interfere with traffic. Do not string pipe more than 300 feet beyond the area where pipe is being laid. Do not obstruct drainage ditches.

d. Storage: Store all pipe which cannot be distributed along the route. Make arrangements for the use of suitable storage areas. Do not interfere with other contractors right to access.

C. CONSTRUCTION ALONG HIGHWAYS, STREETS AND ROADWAYS

Install pipelines and accessories along highways, streets and roadways in accordance with the applicable regulations of the County, City, and/or the Department of Transportation with reference to construction operations, safety, traffic control, road maintenance and repair.

a. Protection of Traffic: Provide and maintain suitable signs, barricades and lights for protection of traffic.

i. Replace all highway signs removed for construction as soon as possible. Do not lose or block any highway, street, or roadway without first obtaining permission from the proper authorities.

ii. Provide flagmen to direct and expedite the flow of traffic.

b. Construction Operations: Perform all work along highways, streets and roadways to least interfere with traffic.

i. Stripping: Where the pipe line is laid along road shoulders, strip and stockpile all sod, topsoil and other material suitable for shoulder restoration.

ii. Trenching, Laying and Backfilling: Do not open the trench any further ahead of pipe laying operations than is necessary. Backfill and remove excess material immediately behind laying operations. Complete excavation and backfill for any portion of the trench in the same day.

iii. Shaping: Reshape damaged slopes, side ditches, and ditch lines immediately after completing backfilling operations. Replace topsoil, sod and any other materials removed from shoulders.

c. Excavated Materials: Do not place excavated material along highways, streets and roadways in a manner which obstructs traffic. Sweep all scattered excavated material off of the pavement.

d. Drainage Structures: Keep all side ditches, culverts, cross drains, and other drainage structures clear of excavated material and free to drain at all times.

e. Maintaining Highways, Streets, Roadways and Driveways: Maintain streets, highways, and roadways in suitable condition for movement of traffic until completion and final acceptance of the work. Use steel running plate to maintain traffic until pavement replacement is completed.

NOTE: Traffic must be maintained at all times. When one lane is closed, flagmen must be utilized to maintain traffic flow.

Repair all driveways that are cut or damaged immediately. Maintain them in a suitable condition for use until completion and final acceptance of the work.

D. EXISTING UNDERGROUND UTILITIES AND OBSTRUCTIONS

a. It is the responsibility of the Contractor to locate all existing utilities along the path of his construction. The drawings shall indicate underground utilities or obstructions that are known to exist. Where these or unforeseen underground utilities are encountered, the location and alignment of the water main may be changed, upon written approval of the Engineer and Owner, to avoid interference.

E. CONNECTIONS TO EXISTING PIPE LINES

a. Before laying pipe, the Contractor shall locate the points of connection to existing pipe lines and uncover as necessary for the Engineer and Owner to confirm the nature of the connection to be made. The Contractor shall furnish materials and make the connection to all existing pipelines. The Contractor will be observed during construction of tie-ins by the Owner and the Engineer. The Contractor shall use all available practices and resources to minimize the time the customers are without water. The Contractor shall notify affected customers of a water outage at least 24 hours in advance.

F. LAYING PIPE

a. General – Ductile iron pipe shall be laid in accordance with AWWA C-600; PVC pipe shall be laid in accordance with AWWA C 605, ASTM D 2774, UNI-Bell UNI-B 3 and the pipe manufacturer's recommendations; HDPE pipe shall be laid in accordance with the AWWA C 906, ASTM D2321, and the pipe manufacturer's recommendations.

b. Construction Methods:

i.Field Inspection: All pipe and accessories shall be laid, jointed, tested for defects and for leakage with pressure and chlorinated in the manner herein specified in the presence of the Engineer or his authorized representative and subject to their approval.

c. Handling Pipe and Accessories:

i.Care: Pipe, fittings, valves and other accessories shall be unloaded at the point of delivery, hauled to and distributed at the site of the project by the contractor;

they shall at all times be handled with care to avoid damage. In loading and unloading they shall be lifted by hoists, slid, or towed on skid-ways in such a manager as to avoid shock. Under no circumstances shall they be dropped. Pipe handled on skidways must not be skidded or rolled against pipe already on the ground.

ii. At Site of Work: In distributing the material at the site of the work, each piece shall be unloaded opposite or near the place where it is to be laid in the trench and shall be laid on high ground so that it will not be in a drainage way.

iii. Bell Ends, How Faced: Pipe shall be placed on the site of the work parallel with the trench alignment and with the bell ends facing the direction in which the work will proceed, unless otherwise directed by the Engineer.

iv. Pipe Kept Clean: The interior of all pipe, fittings and other accessories shall be kept free from dirt and foreign matter at all times.

v. Detection Tape: Marking tape shall be buried a minimum of 12" and a maximum of 18" below finish grade. The tape shall be placed during backfill.

vi. Tracing Wire: Tracer wire will be installed on the top of the pipe and looped up to surface level in all valve boxes and at all service laterals. Tracer wire shall be taped to the top of pipelines at a minimum of 5 ft intervals in a uniform, continuous manner. This tracing wire system shall be checked and tested by the Contractor, in the presence of the Engineer or OWNER, prior to acceptance of the water main installation. All equipment, meters, detectors, etc., needed for testing shall be furnished by the Contractor.

vii. Alignment and Grade:

a. General: All pipe shall be laid and maintained in the required lines and grades, with fittings and valves at the required locations, with joints centered and spigots home, and with all valve stems plumb.

b. Depth of Pipe: Where pipe is laid in roadways and parkways of streets, the top of the barrel of the pipe shall have a minimum cover of thirty-six inches below the curb line of the street or where not curb line has been established, below the existing ground line. Where the pipe is laid in open areas not subdivided a minimum of thirty-six inches of cover is required. A greater depth of cover is required in certain sections of the main, such as railroad crossings, valve locations and other sections of special construction, and within State and Federal highway rights-of-way.

c. Prior Investigation – Prior to excavation, investigation shall be made to the extent necessary to determine the location of existing underground structures and

conflicts. Care shall be exercised by the Contractor during excavation to avoid damage to existing structures. The pipe manufacturers recommendations shall be used when the water main being installed is adjacent to a facility that is catholically protected.

d. Unforeseen Obstructions – When obstructions that are not shown on the plans are encountered during the progress of work and interfere so that an alteration of the plans is required, the Owner will alter the plans, or order a deviation in line and grade, or arrange for removal, relocation, or reconstruction of the obstructions.

e. Clearance – When crossing existing pipelines or other structures, alignment and grade shall be adjusted as necessary, with the acceptance of the Owner, to provide clearance as required by federal, state, and local regulations or as deemed necessary by the Owner to prevent future damage or contamination of either structure.

d. Pipe Handling:

i. Manner of Hauling Pipe and Accessories: Proper implements, tools and facilities shall be provided and used by the contractor for the safe and convenient execution of the work. All pipe, fittings and valves shall be carefully lowered into the trench piece by piece by means of derrick ropes or other suitable tools or equipment, in such manner as to prevent damage to pipe to pipe or accessories be dropped or dumped into the trench.

ii. Inspection: Before lowering and while still suspended, the pipe shall be inspected for defects. Any defective, damaged or unsound pipe shall be rejected.

iii. Pipe Kept Clean: All foreign matter or dirt shall be removed from the pipe, and it shall be kept clean by approved means during and after laying.

iv. Laying of the Pipe: The spigot shall be centered in the bell, the pipe forced "home" and brought into true alignment; it shall be secured there by earth carefully tamped under and on each side of it, excepting at the bell holes. Care shall be taken to prevent dirt from entering the joint space. No "blocking up" of pipe or joints will be permitted. The joint shall be made as hereinafter described.

v. Trench Water Entering Pipe: At times when pipe laying is not in progress, the open ends of the pipe shall be closed by approved means and no trench water shall be permitted to enter the pipe.

vi. Cutting Pipe: Cutting of pipe for inserting valves, fittings or closure pieces shall be done in a neat workmanlike manner without damage to the pipe.

vii. Bell Ends Face Direction of Laying: Unless otherwise directed, pipe shall be laid

with bell ends facing in the direction of laying; and for lines on an appreciable slope, bells shall, at the discretion of the engineer face up-grade.

viii. Permissible Deflections at Joints: Wherever necessary to deflect pipe from a straight line, either in the vertical or horizontal plane to avoid obstructions, the degree of deflection shall be according to manufacturer's recommendations.

ix. Unsuitable Conditions for Laying Pipe: No pipe shall be laid in water, or when the trench conditions or the weather is unsuitable for such work.

e. Jointing Pipe-Mechanical Joints: The following steps shall be taken in making mechanical joints:

i. All lumps, blisters and excess coal-tar enamel shall be removed from socket and spigot of the pipe.

ii. Wash socket and plain end with soapy water containing chloride solution; then slip gland and gasket over plain end. The small side of gasket and lip gland shall face bell.

iii. Paint gasket with soapy solution containing chlorine.

iv. Push gasket into position, being sure it is evenly seated in socket.

v. Slide gland into position; insert bolts and run nuts up finger tight.

vi. Tighten bolts to uniform tightness with correct ratchet wrench. The first bolt tightened shall be the bottom bolt, then top. All other bolts shall be tightened in sequence at 180 degrees apart.

f. Setting, Valves, Valve Boxes and Fittings:

a. General: Valves and pipe fittings shall be set and jointed to new pipe in the manner heretofore specified for cleaning, laying and jointing pipe. Valves shall be installed plumb. Valve-operating stems shall be oriented in a manner to allow proper operation.

b. Valve Boxes: Cast iron valve boxes shall be firmly supported, and maintained centered and plumb over the wrench nut of the gate valve, with box cover.

g. Plugging Dead Ends: Standard plugs shall be inserted into the bells of all dead ends of pipes, tees or crosses and spigot ends shall be capped. Plugs or caps shall be jointed to the pipe or fittings in the manner specified above.

h. Thrust Blocking:

i.Not Allowed. Restrained joints only (see plan set).

i. Pressure and Leakage Tests:

i.Pressure Test: Immediately after the pipe has been laid and backfilled, but prior to the placement of pavement, each valved section of newly laid pipe shall be subjected to a leakage and pressure test. For any section being tested the pressure applied shall be such that at the highest point in the section, the pressure shall be 200 pounds per square inch.

ii.Duration of Test: The duration of each pressure test shall be two (2) hours.

iii.Procedures: Each valved section of pipe shall be slowly filled with water and the specified test pressure, measured at the point of highest elevation shall be supplied by means of a pump connected to the pipe in a satisfactory manner. The pump, pipe connection, and all necessary apparatus, gauges, and meters shall be furnished by the contractor. The contractor shall furnish all necessary labor and assistance in conducting the tests. The owner will furnish, through connections made by the contractor to existing mains, water for filling the lines for making the test.

iv.Expelling Air Before Tests: Before applying the specified test pressure, all air shall be expelled from the pipe. To accomplish this, taps shall be made, if necessary, at points of highest elevation and afterward tightly plugged.

v.Examination Under Pressure: At intervals during the test, the route of the pipeline shall be inspected to locate any leaks or breaks. Any cracked or defective joints, cracked or defective pipe, fittings or valves discovered in consequence of this pressure test shall be removed and replaced with sound material in the manner provided and the test shall be repeated until satisfactory results are obtained.

vi.Permissible Leakage: Leakage shall be defined as the quantity of water that must be supplied into the newly laid pipe, of any valved section thereof, to maintain the specified leakage test pressure after the pipe has been filled with water and the air in the pipeline has been expelled. No installation will be accepted if leakage is greater than that determined by the formula:

vii. $$L = \frac{SD\,(P)^{0.5}}{7{,}400}$$ Where:

L is the allowable leakage, in gallons per hour; S is the number of joints in the length of pipeline tested; D is the nominal diameter of the pipe, in inches; and P is the average test pressure during the leakage test, in pounds per

square inch gauge. Leakage valves determined by the above formula are to be found in the following Table.

Allowable Leakage for PVC Plastic Pipe with Elastomeric Joints in Gallons Per Hour

Nominal Pipe Size, Inches	Average Pressure in Line - P.S.I. 150	200
	Allowable Leakage Per 1000 ft	
4"	.33	.38
6"	.50	.57
8"	.66	.76
10"	.83	.96
12"	.99	1.15

j. Disinfection of Mains: The contractor shall disinfect all new mains, in accordance with AWWA C651 furnishing all labor, equipment and material necessary for the complete disinfection of the mains as hereinafter provided. Mains shall be disinfected by the application of a chlorinating agent into the water used for the initial filling of the mains. The chlorinating agent may be chlorine gas-water mixture, calcium hypochlorite in water, or chlorinated lime of known chlorine content in water and shall be fed through a suitable solution feed device. The chlorinating agent shall be applied at or near the beginning point from which the main is being filled and shall be injected into the main through a corporation cock tapped into the horizontal exit of the newly laid main. The water being used to fill the line shall be controlled to flow into the section to be sterilized very slowly and the rate of application of the chlorinating agent shall be in such proportion to the rate of the water entering the pipe that the chlorine dose applied to the water shall be at least 50 ppm. The chlorine treated water shall be retained in the new main at least 24 hours and a 10 ppm of residual chlorine shall remain after the 24-hour period. Following chlorination all treated water shall be flushed from the mains until replacement water shall have a chlorine content of not more than 0.1 ppm in excess of the residual in water from the supplying main and in any event not less than 0.2 ppm. Samples of the water shall be taken from several points in the new lines and submitted to a State Approved lab for bacteriological analysis. Should the analysis show contamination, the system shall be re-chlorinated and further samples taken and submitted for analysis until no contamination is indicated.

GRAVITY SEWER COLLECTION SYSTEM

PART 1 DESIGN GUIDELINES

A. GENERAL

a. The following water system design guidelines are based on Federal, State, and local health requirements and the Town of Ridgeland's engineering design criteria.
b. Design criteria not indicated herein shall comply with "Ten States Standards" where applicable.
c. These design guidelines are applicable to all developments including, but not limited to, residential, commercial, and industrial developments and subdivisions requiring sewer service from the Town of Ridgeland.

B. SYSTEM DESIGN CRITERIA

a. Minimum gravity sewer main size shall be 8 inches in diameter.

b. There shall be no physical connections between a public or private potable water supply system and a sewer, or appurtenance thereto which may permit the passage of any sewage or polluted water into the potable supply. No potable water pipe may pass through or come into contact with any part of a sewer manhole.

c. Service lines:
   i. Minimum 4 inches in diameter.
   ii. 6 inch diameter services may be provided for no more than 2 residential units and only upon specific approval from the Town.

d. Cleanouts:
   i. Shall be the same size in diameter as the line in which they are installed.
   ii. Maximum size of 6 inches in diameter.
   iii. Minimum size of 4 inches in diameter.

e. Minimum pipe slope:
   i. Main lines:
      1. 8 inches: 0.40%
      2. 10 inches: 0.26%
      3. 12 inches: 0.20%

4. 15 inches: 0.15%
5. 18 inches: 0.12%
6. 21 inches: 0.10%
7. 24 inches: 0.10%

ii. Service lines:
1. 4 inches: 1.0%
2. 6 inches: 0.5%

f. CAPACITY DESIGN
i. Reference Section 2.II of these guidelines.
ii. Shall be based upon Residential Equivalency Units (REUs).
iii. 1 REU shall equal 300 GPD.
iv. All flow not specifically referenced in Section 2.II shall comply with the Unit Contributory Loading Criteria, Appendix A of the SCDHEC Standards for Wastewater Facility Construction: R.61-67.

g. INFILTRATION
i. No infiltration shall be allowed on new construction.
ii. Maximum infiltration for other areas: 100 gallons per inch of pipe per mile per day.

h. SEWER PIPES
i. Shall maintain a straight alignment.
ii. Depth shall be adequate to provide service to the lowest point of development and prevent freezing.
iii. Slopes greater than 20% shall use concrete anchors.
iv. Where small sewer joins a larger one, match the inverts of each.
v. Service laterals shall be located 5 feet from the property corner and on the opposite corner from the water service lateral.

i. SEPARATION OF WATER MAINS AND SEWERS
i. Where possible, locate sewer pipe at least 10 feet away, horizontally, from water lines.
ii. Should 10 feet not be practical, sewer pipe may be closer provided:
1. It is laid in a separate trench.
2. It is laid in the same trench with the water main located at one side on a bench of undisturbed earth.
3. In either of the above cases, the sewer pipe must be a minimum of 18" below the water pipe measured from outside to outside.

iii. Where sewer pipes cross over or under water lines, maintain 18" clearance between the outside edges of the two pipes.
iv. Where new sewer and water pipes cross, both lines must be constructed of ductile iron pipe.

j. COVER
   i. Provide suitable cover on all lines. Minimum cover depth shall be as follows:
      1. Less than 8 inches: 36 inches
      2. 10 to 12 inches: 36 inches
      3. 14 inches and larger: 48 inches
   ii. All piping located within the rights-of-way of the South Carolina Department of Transportation shall have a cover as indicated above or 36 inches below the elevation of the road, whichever is greater.
   iii. Special conditions other than those listed above may be approved upon review by Town Staff.

k. DUCTILE IRON PIPE LOCATIONS
   i. Use ductile iron pipe where sanitary sewer:
      1. Crosses a water line.
      2. Crosses a storm drainage line.
      3. Crosses creeks, rivers, and other water bodies.
      4. Is installed in a casing.
      5. Cover provided is less than listed above.

l. MANHOLES
   i. Maximum manhole spacing shall be 400 feet.
   ii. Minimum angle between manholes shall be 90 degrees.
   iii. Manhole top elevations:
      1. Shall be 1 foot above the fifty year flood elevation.
      2. Shall have a watertight ring and cover if lower than the fifty year flood elevation.
   iv. Outside drops shall be required where the difference in the upstream pipe and the downstream pipe is 18 inches or greater.
   v. Precast concrete manholes must conform to ASTM C-478, at a minimum.

GRAVITY SEWER COLLECTION SYSTEM

PART 2 MATERIALS

Products and materials used in the work shall conform to the following:

A. DUCTILE IRON PIPE

a. Shall conform to ANSI A21.50 (AWWA C-150) latest revision, ANSI A21.51 (AWWA C-151) latest revision, and ASTM A746. All pipe, except specials, shall be furnished in nominal lengths of 18 to 20 feet. All ductile iron pipes and fittings shall be bituminous coated on the outside, and line with Protecto 401 Ceramic Epoxy or equivalent on the inside. Sizes shall be as shown on the drawings. All pipe shall have a Pressure Class 350 pressure rating.

b. Coating on the outside shall be an asphaltic coating approximately 1 mil thick. The finished coating shall be continuous, smooth, neither brittle when cold or sticky when exposed to the sun, and shall be strongly adherent to the iron.

c. Protecto 401 Ceramic Epoxy or equivalent interior lining is a two component, modified epoxy formulated for corrosion control and shall confirm to the following requirements:

i. Conform to ASTM E96, ASTM D714, ASTM D2794, and ASTM G53.
ii. The ability to build at least 50 mils dry in one coat.
iii. The material shall be recoatable with itself for at least seven days with no additional surface preparation when exposed to direct summer sun and a temperature of 90 degrees F.
iv. The material shall contain at least 20 percent by volume of ceramic quartz pigment.
v. A test and service history demonstrating the ability of the material to withstand the service expected.
vi. Posses a minimum solids volume content of 88 percent, ± one percent.
vii. Possess a maximum drying time to allow recoating as follows: 50 degrees F-72 hours; 75 degrees F-18 hours; 90 degrees F-8 hours. If recoating cannot be accomplished within seven days, a light brush blast shall be performed to improve intercoat adhesion.

B. Polyvinyl Chlorine (PVC) Pipe – Shall be unplasturized polyvinyl chloride with integral wall bell and spigot joints with a rubber ring gasket. Pipe and fittings shall

meet the requirements of ASTM-D 3034 SDR 26 for use as a gravity sewer conduit. All pipe must be installed in accordance with ASTM D 2321, with additional bedding as required in these specifications or project details. Sizes and dimensions shall be as shown in the following table.

Nominal Size	Outside Diameter		Minimum Wall Thickness SDR-35	Minimum Wall Thickness SDR-26
	Average	Tolerance		
4"	4.215	±0.007	0.120	0.162
6"	6.275	±0.009	0.180	0.241
8"	8.400	±0.010	0.240	0.323
10"	10.500	±0.013	0.300	0.404
12"	12.500	±0.016	0.360	0.481
15"	15.300	±0.210	0.437	

a. Minimum pipe stiffness (F/Y) at 5% deflection shall be 46 psi for all sizes when tested in accordance with ASTM D2412.

b. PVC gravity sewer pipe shall be supplied in lengths no longer than 13 feet.

c. Each length of pipe shall be marked with the manufacturer's name, trade name, nominal size, class, hydrostatic test pressure, manufacturer's standard symbol to signify it was tested, and date of manufacture. Each rubber ring shall be marked with he manufacturer's identification, the size, the year of manufacture, and the classes of pipe with which it can be used.

C. PIPE JOINTS (GRAVITY SEWER)

a. Ductile Iron Pipe (D.I.) – Shall be flexible rubber gasket Type II, or mechanical joint Type III, conforming to ASA Specification A21.11.

b. Polyvinyl Chloride (PVC) Pipe – Shall be flexible gasket joints for PVC sewer pipe and shall be compression type conforming to ASTM D-3212. The gasket shall conform to ASTM F-477.

c. Transition Joints – The transition between sewer pipes of different materials shall be made by either concrete collar or by special adapters made for that purpose. Adapters between cast iron pipe and pipe of materials will be accepted upon approval by the Engineer. In most cases where special adapters are not available or not approved by the Engineer, concrete collars will be used.

D. FORCE MAIN

a. Polyvinyl Chloride (PVC) Pipe – Shall conform to ASTM D 2241. The pipe

shall have a Standard Dimensional Rating (SDR) of 26 and be of Class 160 psi. PVC pipe shall be the color green and be supplied in 20 foot nominal lengths.

b. Pipe shall be extruded from clean rigid, approved class 12454-A PVC compound conforming to ASTM resin Specification D-1784. Pipe shall have single rubber gasket push-on joint conforming to ASTM D3139.

c. Ductile Iron Pipe (D.I.) – Shall be in accordance with paragraph 2.1-A of this section and conform to ASTM A 377. Joints shall be flexible rubber gaskets Type II, or mechanical joint Type III, conforming to ASA Specification A21.11.

d. Fittings – All fitting shall be ductile iron, compact in weight and size, meeting the requirements of AWWA C110/ANSI A21.10, or AWWA C153/ANSI A21.4, and with a minimum rated working pressure of 250 psi. Fittings shall be mechanical joint and have a nominal wall thickness of Class 54 Ductile Iron Pipe. They shall be furnished with a bituminous outside coating. Special adapters shall be provided, as recommended by the manufacturer, to adapt the PVC pipe to mechanical jointing with cast or ductile iron pipe, fittings or valves.

e. Thrust Blocking – Concrete having compressive strength of not less than 3000 psi shall be used as a cradle or thrust blocking where shown on the plans or where directed by the Engineer. Bends exceeding 22-1/4 degrees, crosses with one opening plugged, and all tees shall be backed with concrete as a thrust block. Blocking shall be placed between solid ground and the fitting to be anchored; the area of bearing on the pipe and on ground in each instance shall be that shown on the plans. The blocking shall be so placed that the pipe fitting joints will be accessible for repair. No extra payment will be made for the thrust blocks.

f. Restrained Joints – Restrained joints for pipe, valves and fittings shall be mechanical joints with ductile iron retainer glands equivalent to "Megalug" or push-on type joints equivalent to "Lok-Ring", "TR Flex" or "Super Lock" and shall have a minimum rated working pressure of 250 psi. The joints shall be in accordance with the applicable portions of AWWA C 111. The manufacturer of the joints shall furnish certification, witnessed by an independent laboratory, that the joints furnished have been tested at a pressure of 500 psi without signs of leakage or failure. Restrained joints shall be capable of being deflected after assembly.

E. MANHOLES

a. Precast Concrete Manholes – shall be Precast reinforced concrete manholes

that meet the requirements of ASTM C478 and the details contained in the project drawings. The minimum compressive strength of the concrete in Precast sections shall be 4000 psi.

i. Joints – shall be tongue and groove sealed with flexible gaskets or mastic sealant. Gaskets shall be O-Ring or Type A or B "Tylox" equivalent to ASTM C443; mastic shall be "Ram-nek" with primer. The "Ram-nek" primer shall be applied to all contact surfaces of the manhole joint at the factory in accordance with the manufacturer's instructions.

ii. Manhole Boots – Provide Neoprane boot seal where sewer enters the manhole. Holes for pipes entering and leaving the manholes shall be core-drilled at the plant location or in the field.

b. Brick and Mortar - Only concrete brick shall be allowed and only for shelf construction or grade adjustment. Mortar shall be made of one part Portland cement and two parts clean sharp sand. Cement shall be Type I and shall conform to ASTM C 150. Sand shall meet ASTM C 144.

c. Frames and Covers – Cast iron manhole frames and covers shall meet the requirements of ASTM A 48 for Class 30 gray iron and all applicable local standards. All castings shall be tough, close grained, smooth and free from blow holes, blisters, shrinkage, strains, cracks, cold shots and other imperfections. No casting will be accepted which weighs less than 95 percent of the design weight. Shop drawings must indicate the design weight and provide sufficient dimensions to permit checking. All castings shall be thoroughly cleaned in the shop and given two coats of approved bituminous paint before rusting begins.

i. Manhole frames and covers shall be as shown on the Standard Detail Drawings.

ii. All frames and covers shall have machined horizontal bearing surfaces.

iii. All manholes shall have standard frames and covers except where specifically shown otherwise on the Drawings.

d. Manhole Steps – provide steps in bases, risers, cones, transition cones, and transition top sections aligned vertically on 16" centers. Secure steps to the wall with a compression fit in tapered holes or cast in place. Steps shall not be vibrated or driven into freshly cast concrete or grouted in place. The steps shall be Copelymer Polypro pylem plastic reinforced with ½" diameter grade 60 bar and have serrated tread and tall end lugs. Step pullout strength shall be a minimum of 2000 lbs when tested according to ASTM C497. The manhole steps shall meet the requirements of ASTM 48, A615 and D4101.

e. Pipe Connections – Shall have flexible watertight joints at the point of entry of any sewer main into the manhole. The joint shall be wedged rubber shape equivalent to "Press Wedge II," or a rubber sleeve equivalent to "Kor-N-Seal" or "Lock-Joint."

f. Coatings – New manholes requiring a force main tie-in shall have all interior surfaces coated with a factory applied coal tar epoxy. The coating shall be 300 M as manufactured by Koppers Company, Inc. or an accepted equivalent. The coating shall be applied in two coats to achieve a dry film thickness of at least 10 mils per coat in accordance with the manufacturer's recommendations. Surfaces shall be cleaned of dust, form oils, curing compounds and other foreign matter prior to the coating application.

F. TEES

a. Tees shall be 4-inches and the same diameter as the run of the pipe. They shall be of the same material as the sewer main.

G. LATERALS

a. Shall be Ductile Iron Pipe conforming to paragraph 2.1-B, with push-on joints or Polyvinyl Chloride pipe with bells and natural rubber rings for jointing, conforming, to Paragraph 2.1-A, PVC Pipe.

H. STONE BACKFILL

a. Shall be graded crushed granite with the following gradation:

Square Opening Size	Percent Passing
1"	100%
3/4"	90 to 100%
3/8"	0 to 65%
No. 4	0 to 25%

I. SAND BACKFILL

a. Shall be clean sand free of clay and organic material. Not more than 10% shall pass the No. 100 sieve.

J. BORROW

a. Where it is determined that sufficient suitable material is not available from the site to satisfactorily backfill the pipe to at least 2 feet above the top of the pipe, the Contractor shall furnish suitable sandy borrow material to accomplish the requirements. The materials shall have not more than 60%

passing the No. 100 sieve, nor more than 20% passing the No. 200 sieve.

K. METAL DETECTION

a. Marking Tape: Detectable marking tape shall consist of a metalized foil laminated between two layers of color coded inert plastic film suitable for lasting as long as the pipe and shall be resistant to alkalis, acids, and other destructive agents found in the soil. The plastic film shall be imprinted with a continuous message "Caution Sewer Line Buried Below". The message shall be in permanent ink. Marking tape shall be not less than 2" wide and not less than 5.5 mil thick with a tensile strength of not less than 120 grams per 1.5 mil. Detectable marking tape shall be the type that can be located by any standard electronic pipe locator.

L. TRACING WIRE

a. Tracer wire shall be installed on all pipelines, gravity sewer, force main, and service laterals in a continuous fashion. It shall be brought to the surface at each locator post on force mains. It shall be accessible from surface at all valve boxes, and locator posts. At locations tracer wire surfaces between valves, regular valve box with plain lid and collar shall be installed between a pipeline marker pair. Tracer wire shall be 12 GA single strand, copper with insulation UL rated for direct bury underground service. Splices shall be UL rated for direct bury and shall be minimizes. Wire for directionally drilled bores shall be a minimum of #8 gauge.

M. CURB MARKING

a. In projects with curb and gutter streets, all service laterals shall be clearly marked by embossing letters in curb perpendicular to the appurtenance. The embossed letter shall be stamped in the curb perpendicular to the appurtenance. The embossed letter shall be stamped in the curb during installation and shall consist of a minimum 3" tall letter indicating type of appurtenance. Lettering shall be "S" for sewer services, and "W" for water services.

GRAVITY SEWER COLLECTION SYSTEM

PART 3 CONSTRUCTION

A. ON-SITE OBSERVATION

a. Town Staff shall have the right to require that any portion of the work be done in his presence and if any work is covered up after such instruction, it shall be exposed by the Contractor for observation. However, if the Contractor notifies the Town Staff that such work is scheduled and the Town Staff fails to appear within 48 hours, the Contractor may proceed without him. All work done and materials furnished shall be subject to review by the Town Staff or Project Representative. All improper work shall be reconstructed and all materials which do not conform to the requirements of the specifications shall be removed from the work upon notice being received from the Town Staff for the rejection of such materials. The Town Staff shall have the right to mark rejected materials so as to distinguish them as such.

B. HANDLING MATERIALS

a. Unloading: Furnish equipment and facilities for unloading, handling, distributing and storing pipe, fittings, valves and accessories. Make equipment available at all times for use in unloading. Do not drop or dump materials. All materials dropped or dumped will be subject to rejection without additional justification.

b. Handling: Handle pipe, fittings, valves and accessories carefully to prevent shock or damage. Handle pipe by rolling on skids, forklift, or front loader. Do not use material damaged in handling.

c. Distribution: Distribute and place pipe and materials to not interfere with traffic. Do not string pipe more than 300 feet beyond the area where pipe is being laid. Do not obstruct drainage ditches.

d. Storage: Store all pipe which cannot be distributed along the route. Make arrangements for the use of suitable storage areas. Do not interfere with other contractors right to access.

C. CONSTRUCTION ALONG HIGHWAYS, STREETS AND ROADWAYS

Install pipelines and accessories along highway, streets and roadways in accordance with the applicable regulations of the County, City and/or the Department of Transportation with reference to construction operations, safety, traffic control, road maintenance and repair.

a. Protection of Traffic: Provide and maintain suitable signs, barricades and lights for protection of traffic.

Replace all highway signs removed for construction as soon as possible. Do not close or block any highway, street, or roadway without first obtaining permission from the proper authorities.

Provide flagmen to direct and expedite the flow of traffic.

b. Construction Operations: Perform all work along highways, streets and roadways to least interfere with traffic.

1. Stripping: Where the pipe line is laid along road shoulders, strip and stockpile all sod, topsoil and other material suitable for shoulder restoration.

2. Trenching, Laying and Backfilling: Do not open the trench any further ahead of pipe laying operations than is necessary. Backfill and remove excess material immediately behind laying operations. Complete excavation and backfill for any portion of the trench in the same day.

3. Shaping: Reshape damaged slopes, side ditches, and ditch lines immediately after completing backfilling operations. Replace topsoil, sod and any other materials removed from shoulders.

c. Excavated Materials: Do not place excavated material along highways, streets and roadways in a manner which obstructs traffic. Sweep all scattered excavated materials off of the pavements.

d. Drainage Structures: Keep all side ditches, culverts, cross drains, and other drainage structures clear of excavated material and free to drain at all times.

e. Maintaining Highways, Streets, Roadways and Driveways: Maintain streets, highways, and roadways in suitable condition for movement of traffic until completion and final acceptance of the work. Use steel running plate to maintain traffic until pavement is completed.

D. EXISTING UNDERGROUND UTILITIES AND OBSTRUCTIONS

a. It is the responsibility of the Contractor to locate all existing utilities along the path of his construction. The drawings shall indicate underground utilities or obstructions that are known to exist. Where these or unforeseen underground utilities are encountered, the location and alignment of the water main may be changed, upon written approval of the Town Staff to avoid interference.

E. CONNECTIONS TO EXISTING PIPE LINES

a. Before laying pipe, the Contractor shall locate the points of connection to existing

pipe lines and uncover as necessary for the Town Staff to confirm the nature of the connections to be made. The Contractor shall furnish materials and make the connection to all existing pipelines. The Contractor will be observed during construction of tie-ins by Town Staff. The Contractor shall use all available practices and resources to minimize the time the customers are without water. The Contractor shall notify affected customers of a water outage at least 24 hours in advance.

F. PIPE DISTRIBUTION

a. Pipe shall be distributed and placed in such a manner that will not interfere with traffic.

b. No pipe shall be strung further along the route than 1,000 feet beyond the area in which the Contractor is actually working without written permission from the Owner and/or Engineer. Town Staff reserves the right to reduce this distance to a maximum distance of 200 feet in residential and commercial areas based on the effects of the distribution to the adjacent property owners.

c. No street or roadway may be closed for unloading of pipe without first obtaining permission from the proper authorities. The Contractor shall furnish and maintain proper warning signs and obstruction lights for the protection of traffic along highways, streets and roadways upon which pipe is distributed.

d. No distributed pipe shall be placed inside drainage ditches.

e. Distributed pipe shall be placed as far as possible from the roadway pavement, but no closer than five feet from the roadway pavement, as measured edge-to-edge.

f. Contractor shall not excavate sanitary sewer trenches more than 400 feet in advance of pipe laying.

G. LAYING AND JOINTING PIPE AND ACCESSORIES

a. Lay all pipe and fittings to accurately conform to the lines and grades established by the construction drawings.

b. Pipe Installation:

1. Proper implements, tools and facilities shall be provided for the safe performance of the Work. All pipe, fittings and valves shall be lowered carefully into the trench by means of slings, ropes or other suitable tools or equipment in such a manner as to prevent damage to sewer materials and protective coatings and linings. Under no circumstances shall sewer

materials be dropped or dumped into the trench.

2. All pipe, fittings, valves and other appurtenances shall be examined carefully for damage and other defects immediately before installation. Defective materials shall be marked and held for inspection by the Owner and/or Engineer, who may prescribe corrective repairs or reject the materials.

3. All lumps, blisters and excess coating shall be removed from the socket and plain ends of each pipe, and the outside of the plain end and the inside of the bell shall be wiped clean and dry and free from dirt, sand, grit or any foreign materials before the pipe is laid. No pipe which contains dirt shall be laid.

4. Foreign material shall be prevented from entering the pipe while it is being placed in the trench. No debris, tools, clothing or other materials shall be placed in the pipe at any time.

5. As each length of pipe is placed in the trench, the joint shall be assembled and the pipe brought to correct line and grade. The pipe shall be secured in place with approved backfill material.

6. It is common practice to lay pipe with the bells facing the direction in which work is progressing.

7. Applying pressure to the top of the pipe, such as with a backhoe bucket, to lower the pipe to the proper elevation or grade shall not be permitted.

8. Polyethylene Encasement: Installation shall be in accordance with AWWA C105 and the manufacturer's instructions. All ends shall be securely closed with tape and all damaged areas shall be completely repaired to the satisfaction of the Owner and/or Engineer.

c. Alignment and Gradient:

1. Lay pipe straight in alignment and gradient or follow true curves, where shown on the Drawings, as nearly as practicable. Do not deflect any joint more than the maximum deflection recommended by the manufacturer.

2. Maintain a transit, level and accessories on the job to lay out angles and ensure that deflection allowance are not exceeded.

3. The Contractor shall check the invert elevation at each manhole and the gravity sewer invert elevation at least three times daily, start, mid-day and end of day. Elevations shall be checked more frequently if more than 100 feet of pipe is installed in a day or if the gravity sewer is being constructed at minimum slope.

4. The Contractor shall check the horizontal alignment of the gravity sewer at the same schedule as for invert elevations.

5. Should any installed pipe have its alignment, grade, or joints disturbed after placement, it shall be taken up and relaid.

d. Expediting of Work: Excavate, lay the pipe, and backfill as closely together as possible. Do not leave unjointed pipe in the trench overnight. Backfill and compact the trench as soon as possible after laying and jointing is completed. Cover the exposed end of the installed pipe each day at the close of work and at all other times when work is not in progress. If necessary to backfill over the end of an uncompleted pipe or accessory, close the end with a suitable plug, either push-on, mechanical joint, restrained joint or as approved by the Owner and/or Engineer.

e. Joint Assembly:

1. Push-on, mechanical, flange and restrained type joints shall be assembled in accordance with the manufacturer's recommendations.

2. Each restrained joint shall be inspected by the Contractor to insure that it has been "homed" 100%.

f. Cutting Pipe:

1. Cut ductile iron pipe using an abrasive wheel saw.

2. Cut PVC pipe using a suitable saw.

3. Remove all burrs and smooth the end before jointing.

4. The Contractor shall cut the pipe and bevel the end, as necessary, to provide the correct length of pipe necessary for installing the fittings, valves, accessories and closure pieces in the correct location. Only push-on or mechanical joint pipe shall be cut.

g. House Connections: Install wyes or tees in locations designated by the Owner and/or Engineer for future connection of service lines. Plug the branch of the wye or tee. Record the location of fittings installed on the Record Drawings.

h. Valve, Fitting and Pressure Gauge Installation:

1. Prior to installation, valves shall be inspected for direction of opening, number of turns to open, freedom of operation, tightness of pressure-containing bolting and test plugs, cleanliness of valve ports and especially

seating surfaces, handling damage and cracks. Defective valves shall be corrected or held for inspection by the Owner and/or Engineer. Valves shall be closed before being installed.

2. Valves, fittings, plugs and caps shall be set and joined to the pipe in the manner specified in this Section for cleaning, laying and joining pipe, except that 12-inch and larger valves shall be provided with special support, such as treated timbers, crushed stone, concrete pads or a sufficiently tamped trench bottom so that the pipe will not be required to support the weight of the valve.

3. A valve box shall be provided on each underground valve. They shall be carefully set, centered exactly over the operating nut and truly plumbed. The valve box shall not transmit shock or stress to the valve. The bottom flange of the lower belled portion of the box shall be placed below the valve operating nut. This flange shall be set on brick, so arranged that the weight of the valve box and superimposed loads will bear on the base and not on the valve or pipe. Extension stems shall be installed where depth of bury places the operating nut in excess of 30-inches beneath finished grade so as to set the top of the operating nut 30-inches below finished grade. The valve box cover shall be flush with the surface of the finished area or such other level as directed by the Owner and/or Engineer.

4. In no case shall valves be used to bring misaligned pipe into alignment during installation. Pipe shall be supported in such a manner as to prevent stress on the valve.

H. SEPARATION BETWEEN WATER & SANITARY SEWER

a. Parallel separation shall be 10 feet horizontal between sanitary sewers and any existing or proposed water mains. Deviation may be authorized for closer installation provided that the sewer is laid in a separate trench such that the bottom of the water main is at least 18 inches above the top of the sewer. Sanitary sewers crossing water mains shall be laid to provide a minimum vertical distance of 18 inches of vertical clearance, both water and sewer line. Where there is less than 18 inches of vertical clearance, both water and sewer lines shall be ductile iron for one full length each side of the crossing with the water pipe joints located as far as possible from the sewer crossing.

I. CONNECTION AND REPAIRS TO AN EXISTING SEWER MAIN

a. Where connections or repairs are required, Contractor shall only use solid sleeves and provide all materials and labor necessary to make the connection or repair to the existing pipeline, excluding service lines 6" or smaller.

J. MANHOLE AND PRECAST CONCRETE PRODUCT CONSTRUCTION

a. Construct manholes as shown on the Standard Detail Drawings.

b. Precast Concrete: Handle sections carefully to prevent cracking or chipping. Provide uniform bedding of the bottom section to prevent uneven loading. Install gaskets and joint sealants in accordance with manufacturer's recommendations to produce a water tight structure.

c. Brick: Bed the bottom and sides of every brick in mortar. Apply a smooth coat of mortar, ¾-inch thick, on the inside and outside. Brick is only allowed for invert benches or for grade adjustment.

d. Inverts: Form channels as shown on the Drawings, rounded, and troweled smooth. Maintain consistent grade through the invert. Use sand-cement grout.

e. Top Elevations: Build manholes outside of paved areas to 18-inches above finished grade or as directed by Town Staff. Build manholes in paved areas to existing grades.

f. Drop Connections: Construct drop connections of ductile iron pipe.

g. Frames and Covers: Unless frame and cover is at grade, the frame shall be cast into the cone section.

h. Seal all manhole joints and lift holes, both inside and out, with grout. Between Precast sections, this is in addition to joint sealant.

i. Invert Elevations: The invert elevations shall be for the invert at the centerline of the Precast concrete manhole. Prior to setting the laser or other vertical alignment control system for the sewer upstream of the manhole, the Contractor shall verify the elevation of the sewer installed at the manhole.

j. Manholes shall be constructed such that their walls are plumb.

k. Floor doors shall be integrally cast into the top slab, and shall be cast into the concrete in accordance with the manufacturer's recommendations.

K. DETECTION TAPE, TRACING WIRE, CURB MARKING

a. Detection Tape: Marking tape shall be buried a minimum of 12" and a maximum of 18" below finish grade. The tape shall be placed during backfill.

b. Tracing Wire: Tracer wire will be installed on the top of the pipe and looped up to surface level in all valve boxes and at all service laterals. Tracer wire shall be taped

to the top of pipelines at a minimum of 5 ft intervals in a uniform, continuous manner.

c. Curb Marking: In projects with curb and gutter streets, all service laterals shall be clearly marked by embossing letters in curb perpendicular to the appurtenance. The embossed letter shall be stamped in the curb perpendicular to the appurtenance. The embossed letter shall be stamped in the curb during installation and shall consist of a minimum 3" tall letter indicating type of appurtenance. Lettering shall be "S" for sewer services, and "W" for water services.

L. THRUST RESTRAINT

a. Provide restraint at all points where hydraulic thrust may develop.

b. Retainer Glands: Provide retainer glands where shown on the Drawings and all associated fittings, valves and related piping. Retainer glands shall be installed in accordance with the manufacturer's recommendations, particularly, the required torque of the setscrews. The Contractor shall furnish a torque wrench to verify the torque on all set screws which do not have inherent torque indicators.

c. Harnessing: Harness rods shall be manufactured in accordance with ASTM A 36 and shall have an allowable tensile stress of no less than 22,000 psi. Harness rods shall be hot dip galvanized or field coated with bitumastic before backfilling. Where possible, harness rods shall be installed through the mechanical joint bolt holes. Where it is not possible, provide 90 degree bend eye bolts. Eye bolts shall be of the same diameter as specified in AWWA C111 for that pipe size. The eye shall be welded closed. Where eye bolts are used in conjunction with harness rods, an appropriate size washer shall be utilized with a nut on each end of the harness rod. Eye bolts shall be of the same material and coating as the harness rods.

d. Concrete Blocking:

1. Provide concrete blocking for all other bends, tees, valves, and other points where thrust may develop, except where other means of thrust restraint are specifically shown on the Drawings.

2. Form and pour concrete blocking at fittings as shown on the Drawings and as directed by the Owner and/or Engineer. Pour blocking against undisturbed earth. Increase dimensions when required by over excavation.

M. INSPECTION AND TESTING

a. Clean and flush lines prior to testing. Clean and test lines before requesting final acceptance. Where any obstruction is met, clean the sewers by means of rods, swabs or other instruments. When requested by Town Staff, flush out lines and manholes

before final inspection.

b. Gravity Sewers: Pipe lines shall be straight and show a uniform grade between manholes. Correct any discrepancies discovered during inspection.

1. Infiltration Tests: Use only when groundwater is more than two feet above the top of the pipe.

a. Install suitable weirs in manholes selected by the Owner and/or Engineer to determine the leakage of ground water into the sewer. The maximum length of line for each infiltration test shall be 5,000 feet. Measure leakage only when all visible leaks have been required and the ground water is two feet above the top of the pipe. If leakage in any section of the sewer line exceeds 25 gpd/inch diameter/mile, locate and repair leaks. Repair methods must be approved by the Owner and/or Engineer. After repairs are completed, re-test for leakage.

b. Furnish, install, and remove the necessary weirs, plugs, and bulkheads required to perform the leakage tests.

2. Exfiltration Tests: Choose one of the following when groundwater is less than two feet above the top of the pipe.

a. Hydrostatic Test:

1. Test pipe between manholes with a minimum of 10 feet hydrostatic pressure, measured at the center of the pipe at the upstream manhole.

2. The ends of the pipe in the test section shall be closed with suitable watertight bulkheads. Inserted into the top of each bulkhead shall be a 2-inch pipe nipple with an elbow. At the upper end of the test section, a 12-inch riser pipe shall be connected to the 2-inch nipple. The test section of pipe shall be filled through the pipe connection in the lower bulkhead which shall be fitted with a valve, until all air is exhausted and until water overflows the riser pipe at the upper end.

Water may be introduced into the pipe 24 hours prior to the test period to allow complete saturation.

House service lines, if installed, shall also be fitted with suitable bulkheads having provisions for the release of air while the test section is being filled with water.

3. During the test period, which shall extend over a period of two hours, water shall be introduced into the riser pipe from measured containers at such intervals as are necessary to maintain the water level at the top of the riser pipe. The total volume of water added during the test period shall not exceed that specified for infiltration.

b. Low-Pressure Air Test:

1. Prior to air testing, the section of sewer between manholes shall be thoroughly cleaned and wetted. Immediately after cleaning or while the pipe is water soaked, the sewer shall be tested with low-pressure air. At the Contractor's option, sewers may be tested in lengths between manholes or in short sections (25 feet or less) using inflatable balls pulled through the line from manhole to manhole. Air shall be slowly supplied to the plugged sewer section until internal air pressure reaches approximately 4.0 psi. After this pressure is reached and the pressure allowed to stabilize (approximately two to five minutes), the pressure may be reduced to 3.5 psi before starting the test. If a 1.0 psi drop does not occur within the test time, then the line has passed the test. If the pressure drops more than 1.0 psi during the test time, the line is presumed to have failed the test, and the Contractor will be required to locate the failure, make necessary repairs, and retest the line. Minimum test time for various pipe sizes, in accordance with ASTM C 828 is as follows:

Nominal Pipe Size, Inches	T (Time Min/100) Feet
6	0.7
8	1.2
10	1.5
12	1.8
15	2.1

18	2.4
21	3.0
24	3.6

2. Required test equipment, including inflatable balls, braces, air hose, air source, timer, rotameter as applicable, cut-off valves, pressure reducing valve, 0-15 psi pressure gauge, 0-5 psi pressure gauge with gradations in 0.1 psi and accuracy of ± two percent, shall be provided by the Contractor. Testing equipment shall be equal to Cherne Air-Loc Testing Systems.

3. The Contractor shall keep records of all tests made. Copy of such records will be given to the Owner and/or Engineer. Such records shall show date, line number and stations, operator, and such other pertinent information as required by the Owner and/or Engineer.

4. The Contractor is cautioned to observe proper safety precautions in performance of the air testing. It is imperative that plugs be properly secured and that care be exercised in their removal. Every precaution shall be taken to avoid the possibility of over-pressurizing the sewer line.

3. Deflection Test:

a. Test PVC gravity sewer for excessive deflection by passing a mandrel through the pipe. Deflection of the pipe shall not exceed the following:

Nominal Pipe Diameter	Maximum Allowable Deflection
< 12-inches	5%
15 to 30-inches	4%
> 30-inches	3%

b. The mandrel size shall be based upon the maximum possible inside diameter for the type of pipe being tested, taking into account the allowable manufacturing tolerances of the pipe. The mandrel shall have an odd number of legs, or vanes, with a quantity of such equal to or greater than nine. The legs of the mandrel shall be permanently

attached to the mandrel. A mandrel with variable sizes shall not be allowed. The mandrel shall be constructed of steel aluminum or other material approved by the Owner and/or Engineer, and shall have sufficient rigidity so the legs of the mandrel will not deform when pulling through a pipe. The mandrel dimensions shall be checked by the Owner and/or Engineer before use by the Contractor.

c. Excavate and install properly any section of pipe not passing this test. Re-test until results are satisfactory.

d. The test shall be performed within the first 30 days of installation and during final inspection, at the completion of this contract.

e. The mandrel shall be performed in accordance with ASTM D 3034, F679, or 2122.

4. Closed Circuit Television: If deemed necessary by the Owner and/or Engineer, the interior of the gravity sewers shall be subjected to a televised inspection. Prior to Final Acceptance the Owner and/or Engineer shall be provided with one copy of the TV inspection report and video cassette showing the entire length of gravity sewer being tested. The report shall contain the condition of pipe, type of pipe, depth, location of services, length, type joint, roundness, and distance between manholes. Any pipe found to be cracked, leading, misaligned, bellied or otherwise defective shall be removed and replaced.

c. Manholes: Prior to testing manholes for water tightness, all lift holes shall be plugged with a non-shrink grout, all joints between Precast sections shall be properly sealed and all pipe openings shall be temporarily plugged and properly braced. Each manhole shall pass one of the following tests:

1. Exfiltration Tests: The manhole, after proper preparation as noted above, shall be filled with water. The maximum allowable leakage shall be eight gallons per foot of depth per 24 hours for 48-inch diameter manholes. Tests shall last a minimum of eight hours. The manholes may be backfilled prior to testing.

2. Vacuum Tests: The manhole, after proper preparation as noted above, shall be vacuum tested prior to backfilling. The test head shall be placed at the inside of the top of the cone section and the compression head inflated to 40 psi to effect a seal between the vacuum base and the manhole structure. Connect the vacuum pump to the outlet port with the valve open. A vacuum of 10-inches of mercury shall be drawn and the vacuum pump shut off. With

the valves closed, the time shall be measured for the vacuum to drop to 9-inches. The manhole shall pass if the time is greater than 60 seconds for 48-inch diameter manholes. If the manhole fails the initial test, necessary repairs shall be made with non-shrink grout while the vacuum is still being drawn. Retesting shall proceed until a satisfactory test is obtained. Vacuum testing equipment shall be equal to that as manufactured by P.A. Glazier, Inc.

d. Re-Testing: Any alterations made to pipeline or manholes performed after initial testing shall be re-tested and pass again, regardless of initial test results.

e. Notification: Owner and/or Engineer shall be notified 24-hours in advance prior to Contractor performing any testing.

N. PROTECTION AND RESTORATION OF WORK AREA

a. General: Return all items and all areas disturbed, directly or indirectly by work under these Specifications, to their original condition or better, as quickly as possible after work is started.

1. The Contractor shall plan, coordinate, and prosecute the work such that disruption to personal property and business is held to a practical minimum.

2. All construction areas abutting lawns and yards of residential or commercial property shall be restored promptly. Backfilling of underground facilities, ditches, and disturbed areas shall be accomplished on a daily basis as work is completed. Finishing, dressing, and grassing shall be accomplished immediately thereafter, as a continuous operation within each area being constructed and with emphasis placed on completing each individual yard or business frontage. Care shall be taken to provide positive drainage to avoid ponding or concentration of runoff.

3. Handwork, including raking and smoothing, shall be required to ensure that the removal of roots, sticks, rocks, and other debris is removed in order to provide a neat and pleasing appearance.

4. The Department of Transportation's engineer shall be authorized to stop all work by the Contractor when restoration and cleanup are unsatisfactory and to require appropriate remedial measures.

b. Man-Made Improvements: Protect, or remove and replace with the Owner and/or Engineer's approval, all fences, walkways, mail boxes, pipe lines, drain culverts, power and telephone lines and cables, property pins and other improvements that may be encountered in the work.

c. Cultivated Growth: Do not disturb cultivated trees or shrubbery unless approved by the Owner and/or Engineer. Any such trees or shrubbery which must be removed shall be heeled in and replanted under the direction of an experienced nurseryman.

d. Cutting of Trees: Do not cut trees for the performance of the work except as absolutely necessary. Protect trees that remain in the vicinity of the work form damage from equipment. Do not store spoil from excavation against the trunks. Remove excavated material stored over the root system of trees within 30 days to allow proper natural watering of the root system. Repair any damaged tree over 3-inches in diameter, not to be removed, under the direction of an experienced nurseryman. All trees and brush that require removal shall be promptly and completely removed from the work area and disposed of by the Contractor. No stumps, wood piles, or trash piles will be permitted on the work site.

e. Disposal of Rubbish: Dispose of all materials cleared and grubbed during the construction of the project in accordance with the applicable codes and rules of the appropriate city and/or county, state and federal regulatory agencies.

f. Swamps and Other Wetlands:

1. The Contractor shall not construct permanent roadbeds, berms, drainage structures or any other structures which alter the original topographic features within the easement.

2. All temporary construction or alterations to the original topography will incorporate measures to prevent erosion into the surrounding swamp or wetland. All areas within the easement shall be returned to their original topographic condition as soon as possible after work is completed in the area. All materials of construction and other non-native materials shall be disposed by the Contractor.

3. The Contractor shall provide temporary culverts or other drainage structures, as necessary, to permit the free migration of water between portions of a swamp, wetland or stream which may be temporarily divided by construction.

4. The Contractor shall not spread, discharge or dump any fuel oil, gasoline, pesticide, or any other pollutant to adjacent swamps or wetlands.

SEWER PUMP STATION

PART 1 DESIGN GUIDELINES

A. GENERAL

a. The following water system design guidelines are based on Federal, State, and local health requirements and the Town of Ridgeland's engineering design criteria.
b. These design guidelines are applicable to all developments including, but not limited to, residential, commercial, and industrial developments and subdivisions requiring sewer service from the Town of Ridgeland.

B. GENERAL PUMP STATION DESIGN CRITERIA

a. Pumps shall be submersible type duplex station.
b. Pumps shall be of equal capacity, each capable of handling the design peak flow.
c. Pumps shall be capable of passing 3 inch spherical solids, minimum.
d. Pumps shall be designed to operate at or near peak efficiency.
e. Suction and discharge piping shall be 4 inches in diameter, minimum.
f. Grinder pump stations shall not be allowed without prior written approval from Town Staff.
g. Design Peak Factor:
    i. Shall be 2.5, minimum.
    ii. Shall be based on the source of the wastewater and the distance of the pump station from the source.
h. Future Capacity shall be considered when sizing the stations. Wetwells shall be designed for ultimate buildout capacity of the drainage area.
i. Wetwell level settings:
    i. Distance between pump "OFF" and lead pump "ON" shall be as specified by the manufacturer, minimum.
    ii. Distance between lead pump "ON" and lag pump "ON" shall be 6 inches, minimum.
    iii. Distance between lag pump "ON" and alarm "ON" shall be 6 inches, minimum.
    iv. Distance between alarm "ON" and lowest gravity sewer invert elevation shall be 1 foot, minimum.
j. Provide check valve, plug valve, uniflange coupling, and pressure gauge on each pump discharge line to be located in the valve pip only.

k. Locate pumps, influent pipes, and float cables so that influent does not interfere with floats during operation.
l. Provide manhole on influent gravity sewer line within 40 feet of pump station for by-pass pumping.
m. Provide a by-pass connection on the force main within 40 feet of the pump station.

C. SUBMERSIBLE PUMP STATION

a. Provide opposite-opening, dual-access covers and grates with stainless steel safety chains or nylon-coated stainless steel wire rope for the wetwell.
b. Provide stainless steel hoist sockets with covers on top of the wetwell.
c. Install valves in a valve pit separate from the wetwell.
    i. Valve pit shall be adequately sized to allow for operation and maintenance of all valves in the pit.
    ii. Minimum valve pit dimensions shall be:
        1. 4 inch diameter discharge: 4 feet x 4 feet.
        2. 6 inch diameter discharge: 6 feet x 4 feet.
    iii. Provide opposite-opening, dual-access covers with stainless steel safety chains or nylon-coated stainless steel wire rope for the valve pit.
    iv. Provide manhole steps in the valve pit.
    v. Valve pit shall have a 4 inch floor drain with integral P-trap and float valve with drain to the wetwell. Provide adequate depth in the valve pit to allow for installation of the floor drain.
    vi. Valve pit shall be precast.
    vii. Provide ½" tap with pressure gauge connection and pressure gauge in the valve pit prior to the check valve installation.

D. WETWELL DESIGN CRITERIA

a. The wetwell shall be sized based on the following considerations:
    i. Flow from the proposed development and any other associated future development.
    ii. Additional flows as directed by Town Staff.
    iii. Utilize the following formula:

$$V = T / (\{1/(Q-S)\} + \{1/S\})$$

Where: V = Effective Volume of the Wetwell (in gallons)
T = Time for One Pump Cycle (in minutes)
Q = Pumping Rate (in Gallons / Minute)
S = Influent Pump Rate (in Gallons / Minute)

iv. Normal operating volume shall prevent any one pump from starting more than 3 times per hour.

b. Interior components:
   i. Type 316L stainless steel hardware including, but not limited to, the following:
      1. Lifting chains
      2. Anchor bolts
      3. Bolts and nuts
      4. Rail guides
      5. Cable holder
      6. Lifting handle mounted on pumps.
   ii. Locate level floats where influent flow does not interfere with proper operation.
   iii. Provide a cable holder / hanger for the float cables and power cables.
   iv. Line the wetwell walls and bottom surface of the top cover with high density polyethylene (HDPE) concrete protective liner or Raven epoxy coating.
c. Minimum slope of 1:1 on the bottom of the wetwell.
d. Locate wetwell to allow access for boom and vacuum trucks.
e. Provide a vent for the wetwell through the cover.

E. ELECTRICAL
   a. Electrical service shall be designed for ultimate capacity of the pump station.
   b. Control panel shall be at least 3 feet away from the wetwell cover.
   c. Provide 3-phase power.
   d. Provide a surge protector on the main power source.
   e. Provide an emergency generator receptacle.
   f. Provide a quartz-halogen flood light.
   g. Provide a junction box below the control panel for electrical connections.

F. PUMP STATION SITE
   a. Minimum fenced area shall be 40 feet by 40 feet.
   b. Provide a 12 feet wide double gate for vehicle access. Offset gate from wetwell to allow vehicles to enter fenced area.
   c. Provide a secondary gate for personnel.
   d. Access road shall be 12 feet wide and shall be graded crushed stone, at a minimum.
   e. Provide 4 inches of #57 stone throughout the pump station site extending to 1 foot outside the fence line. Provide an underlayment of weed control fabric.
   f. Provide chain link fencing coated with black epoxy.

g. Provide a 1 inch water service with backflow preventer to the site.

SEWER PUMP STATION

PART 2. MATERIALS

A. GENERAL

1. The product design, performance, materials, manufacture, handling, and installation shall conform to the following references and project specifications:

a) ASTM C890-73 (Latest Revision) – Standard practice for minimum structural design loading for monolithic or sectional precast concrete water and wastewater structures.

b) ASTM C891-78 (Latest Revision) – Standard practice for installation of underground precast concrete utility structures.

c) ASTM C913-79 (Latest Revision) – Precast concrete water and wastewater structures.

2. Acceptable Manufacturers:

Pumps shall be as manufactured by US Filter EMU or equivalent.

B. WET WELL STRUCTURE

1. Shall be precast reinforced concrete sections. The product design, performance, materials, manufacture, handling, and installation shall conform to the following references and the project specifications:

a) ACI 318 – Building Code Requirements for Reinforced Concrete

b) ASTM C 39 – Compressive Strength of Cylindrical Concrete Specimens

c) ASTM C-478 – Precast Reinforced Concrete Manhole Sections

d) ASTM C 890 – Minimal Structural Design Loading for Precast Concrete Water and Wastewater Structures

e) ASTM C 891 – Installation of Underground Precast Concrete Utility Structures

f) ASTM C 913 – Precast Concrete Water and Wastewater Structures

2. The Contractor or his supplier shall provide for the design of the precast structure 5. Each section of the structure shall be designed and manufactured for its individual depth, loading conditions (lateral, surcharge and hydrostatic), and opening requirements. All concrete in the precast structure 5 shall have a minimum compressive strength of 4,500 psi after 28 days. Reinforcing steel shall comply with ASTM A 615 Grade 60 (min. fy = 60,000 psi). Bar bending and placement shall comply with the ACI latest standards.

3. The precast structure manufacturer shall have the necessary equipment and facilities for the proper manufacture of the sections and to perform compressive strength tests on concrete tests specimens. Test cylinders shall be made for each structure and test conducted in accordance with ASTM C 39 except that the compressive strength shall be equal to or greater than the design of the concrete. Structure design computations, concrete mix design, and test reports certifying that design strength has been achieved at the 28-day break shall be submitted to the Engineer. Design of the structure shall be performed by a registered professional engineer at the Contractor's expense. The design parameters for the precast structure shall include:

4. Lateral load based on a water table at the surface using equivalent fluid pressure of 80 pcf from the surface grade down and a vehicle wheel load designation of HS20-44. Design live load for the top slab shall be 300 psf. The precast concrete sections shall have a minimum wall thickness of 6" and minimum top and bottom slab thicknesses of 8". Actual thicknesses greater than minimum shall be as required by the loading conditions.

5. The access hatches in the top slab of the wet-well structure shall be for the clear opening dimensions indicated and have a load capacity of 300 psf. The material shall be Aluminum Alloy 6063-T5 and T6, minimum ¼" thick plate, flush-type lock with inside spoon handle. The frame shall be complete with hinged and hasp-equipped cover, upper guide holders, chain holders and cable holder. Chain and cable holders shall be stainless steel or aluminum. Frame shall be securely mounted above the pumps. The hatch covers shall be torsion-bar loaded for ease of lifting and shall have a safety-locking handle in open position.

6. The Contractor shall furnish and install guide bars for each pump to permit raising and lowering the pump. Guide bars shall be galvanized and of adequate length and strength to extend from the lower guide holders on the pump discharge connection to the upper guide holder mounted on the access frame.

7. The wet well shall be provided with a sleeve, 24" below finished grade, for access of the power and control conduits. The sleeve shall be of proper size to accommodate all necessary power and control conduits.

8. All interior concrete surfaces shall have a factory applied coal tar epoxy

coating. The coating shall be 300M as manufactured by Koppers Company, Inc. or an accepted equivalent. The coating shall be applied in two coats to achieve a dry film thickness of at least 10 miles per coat in accordance with the manufacturer's recommendations. Concrete surfaces shall be cleaned of all dust, form oils, curing compounds and other foreign matter prior to the coating application.

9. The structure manufacturer shall prepare and submit eight (8) sets of shop drawings showing wall and slab thicknesses, structural reinforcing and opening locations. The manufacturer shall also provide the design analyses and calculations to show that all sections have been designed for the burial depths shown on the construction drawings as well as stresses incurred during transport, handling and installation. Calculations and analyses must be performed and sealed by a licensed professional engineer and submitted for review. All shop drawings and design calculations shall be submitted to the Contractor for review. Contractor shall forward these documents to the Engineer. Such documents shall bear the stamp or written statement of the Contractor indicating Contractor's review for completeness and receipt. Contractor shall be responsible for the accuracy of the shop drawings and for their conformity to the Plans and Specifications. Shop drawings with insufficient or incomplete data required to indicate compliance with these specifications are not acceptable and will be returned to the Contractor. Rejected shop drawings shall not relieve the Contractor from his obligation to complete the project within the time allowed by the Contract Documents.

C. PUMP DESIGN

1. Furnish and install two (2) submersible non-clog sewage pumps that are ABS Pumps or approved equal, with four inch (4") discharge flange size pumps. The motors shall be 5 horsepower, 1780 R.P.M., 230 volts, three phase, 60 hertz NEMA design B. The pumps shall be capable of delivering 225 gallons per minute (GPM) at a design pressure of 29 feet total dynamic head (TDH) with a 194 mm impeller.

2. In addition, the pump shall be supplied with 40 feet of submersible cable (SUBCAB) suitable for submersible pump station applications. Each pump shall be fitted with 30 feet of stainless steel lifting chain and lift handle mounted to the pump. The working load of the lifting system shall be 50% greater than the pump unit weight.

3. The pump shall be capable of handling raw, unscreened sewage with the capacity to pass 3 inch diameter spheres. The discharge elbow shall be permanently installed in the wet well along with the discharge piping. The pumps shall be automatically connected to the discharge connection elbow when lowered into place. Pumps shall be easily removable for inspection and service, requiring no bolts, nuts, or other fasteners to be removed for the purpose and no need for personnel to enter the pump well. Sealing of the pumping unit to the discharge elbow shall be

accomplished by a simple linear downward motion of the pumps with the entire weight of the pumping units guided to and pressed tightly against the discharge elbow with a metal to metal watertight contact. Sealing of the discharge interface by means of a diaphragm, o-ring, or any other device will not be acceptable.

4. No portion of the pump shall bear directly on the floor of the sump, and there shall be no more than one 90 degree bend allowed between the volute discharge flange and sump piping. Guide bars, which all steer the pump into proper contact with the discharge elbow shall be non-adjustable and shall not bear the weight of the pump.

5. The pump shall be designed and constructed to pump sewage, storm water, sludge and other water based liquids without injurious damage during operation. The design is such that the lifting cover, stator housing, and volute casing are constructed of ASTM A48, Class 30, gray cast iron. The volute shall be of centerline discharge design and shall be fitted with ANSI 125 pound compatible discharge flange which shall be capable of withstanding 150% of the pump shutoff head in accordance with the Hydraulic Institute Standards. The interfaces between the major castings shall be machined for metal to metal contact and shall be additionally protected with circular cross-section Buna-N o-rings. All the nuts, bolts, washers and other fastening devices shall be constructed of type 316 stainless steel. All exposed surfaces of the castings shall be coated with a single coat of PVC type varnish that is resistant to sewage. The pump shall be designed for continuous operation under submerged conditions without leakage to a depth of up to 65 feet.

D. PUMP CONSTRUCTION

1. Pump Construction – The pump(s) shall be designed to pump sewage, storm water, heavy sludge and other fibrous materials without injurious damage during operation. The design shall be such that the lifting cover, stator housing and volute casing are of gray iron construction with all nuts, bolts, washers and other fastening devices coming into contact with sewage, be constructed of stainless steel and protected by primer coat and a coat of rubber-asphalt or epoxy paint. The impeller shall be hard alloy gray iron construction, dynamically balanced, double shrouded, non-clogging design with a long thoroughfare and no acute angles.

2. The pump motor shall be of Class F insulation, NEMA B design, watertight and positively oil cooled, filled with a transformer oil, quality BP Energol JSO or Shell Diala D or DX or housed in an air-filled watertight chamber. The pump motor shall be guaranteed to run in a totally, partially or non-submerged condition continuously for a period of 24 hours without injurious damages. Water cooled pumps shall not be considered equal. Before final acceptance, a field running test at the job site demonstrating the ability to operate continuously for 24 hours under a non-submerged condition, shall be performed for all pumps being supplied, if required. The pump shall be provided with a tandem double mechanical seal

running in an oil bath. The seals shall be of lapped tungsten carbide and welded to stainless steel retainers and held in contact by separate springs. Conventional double mechanical seals with a spring assembly between the rotating faces, requiring constant differential pressure to effect sealing and subject to penetration and opening by pumping forces shall not be considered equal to the tandem seal specified and required. The pump shaft shall be of stainless steel and supported by a double row inboard bearing for axial thrust and a single row outboard bearing for radial thrust. The impeller shall be connected to a short sturdy shaft in order to minimize shaft deflection. The shaft shall not extend more than 2 ½ times its diameter below the nearest support bearing.

3. The pump cable shall be of proper length to reach from the pumps in the wet well to the control panel without any splices. The cable shall be the "SO" or hypalon jacketed SPC type and in compliance with industry standards for loads, resistance against sewage and of stranded construction. The cable shall enter the pump through a heavy duty entry assembly which shall be provided with an internal grommet assembly to protect against leakage once secured and must have a strain relief assembly as part of standard construction. The power cable shall connect to a terminal board which separates the incoming service from the pump motor where if leakage occurs, the terminal board will short out and not cause damage to the motor.

4. Each pump shall be supplied with a universal coupling which bolts to the pump discharge flange and shall accept the discharge elbow provided by the pump manufacturer. Seal of the pump at the discharge flange shall be accomplished by a single downward linear motion of the pump with the entire weight of the pump guided to and pressing against the discharge connection; no part of the pump shall bear directly on the sump floor and no rotary motion of the pump shall be required for sealing. Sealing at the discharge shall be effected to ensure a positive leak proof system and for ease of removal. The pump shall be guaranteed not to leak at the discharge flange.

E. PUMP TEST

The pump manufacturer shall perform the following tests on each pump before shipment from the factory:

1. Megger the pump for insulation breaks or moisture.

2. Prior to submergence, the pump shall be run dry and be checked for correct rotation.

3. Pump shall be run for 30 minutes in a submerged condition.

4. Pump shall be removed from test tank, meggered immediately for moisture; oil plugs removed for checking of upper seal and possible water intrusion of stator

housing.

5. A written certified test report giving the above information shall be supplied with each pump at the time of shipment.

6. All pump cable ends will then be fitted with a rubber shrink fit boot to protect cable prior to electrical installation.

F. PUMP CONTROLS

1. To synchronize the operation of the pumps with variations of sewage level in the wet well, the Contractor shall provide a liquid level sensor system consisting of a mercury switch enclosed in a smooth, chemical resistant urethane or polypropylene casing suspended on its own cable. The cables shall be of proper length to reach from the floats in the wet well to the control panel without any splices. Four (4) such sensors shall be installed to determine pump-on, lag pump on, pump-off, and high-level alarm conditions. An alternator shall also be provided to change the sequence of operation of the pumps at the completion of each pumping cycle. Provisions shall also be made for the pumps to operate in parallel if the level in the wet well continues to rise above the "pump-on" cycle. The Contractor shall furnish and install one (1) automatic control center, equipped with individual disconnects, across-the-line magnetic starters, 3 phase, overload and phase protection, electrical alternator, automatic transfer to non-operating pump in event of overload in operating pump, overload reset, hand-off-automatic pump operation selector switch, 24 volt control circuit transformer, and terminal board with connections for high-level alarm. The control center shall be installed on a stainless steel rack next to the station. Cables provided for pump feeders and pump controls shall be installed in conduit from control centers to entrance point in wet wells. See detail sketch on construction drawings.

2. Furnish a quantity of 1, automatic pump control center in NEMA 4X enclosure of stainless steel construction for operation on 230 volts, three phase, 60 hertz, 4 wire power supply by the pump manufacturer. The electrical schematics for the panel shall be per the project schematics and specifications.

3. The control panel enclosure shall be in accordance with Underwriters Laboratories and must bear the manufacturer's UL label for enclosures. The control panel assembly and wiring shall be in accordance with Underwriters Laboratories UL508 and must bear the manufacturer's UL label. All components used in the panel shall be Underwriters Laboratories approved for the application. Electrical work shall be in accordance with the latest edition of the National Electric Code and subject to local codes.

G. ALARM

1. A high water alarm shall be supplied. Alarm flashing light shall be supplied in separate NEMA 4X enclosure for mounting at the control box. An audible alarm consisting of a weather-proof alarm bell with automatic reset bell silencer switch and signal light shall be installed in addition to the flashing red light alarm.

H. VALVE PIT

1. The valve pit structures shall consist of one 5' x 6' x 5'deep inside dimension section. The valve pits shall have double 3' x 4' hinged access cover. All pipe wall penetrations shall be through cast-in holes with flexible rubber sealing connectors. The bottom slab of the structures shall have a minimum thickness 6" with formed "knock-out" holes to allow for gravity drainage of valve pit into the wet well. The valve pits shall also include an 18" wide fiberglass ladder rated for 250 lbs attached as shown on plans with stainless steel hardware.

I. EQUIPMENT FASTENERS

1. Pump bases shall be fastened to the concrete wet well invert by no less than four ¾" stainless steel bolts. The bolts shall be threaded into concrete anchor inserts which have been cast into the invert and shall have a pull-out strength of no less than 5,000 lbs.

J. JOINT SEALING MATERIAL

1. Joints between precast sections shall be sealed with one inch diameter Butyl rubber sealant conforming to Federal Specifications number SS-S-00210-A and AASHTO-198. The material shall be compounded of 100% solids. Asphaltic or petrochemical based materials shall not be used.

K. FLEXIBLE PIPE CONNECTORS

1. Watertight connections between the sewer pipe and wet well shall be achieved with flexible pipe connectors conforming to ASTM C923.

L. IMPELLER

1. The impeller, both statically and dynamically balanced, shall be of double shrouded nonclog design having smooth surfaces and free from acute angles in the flow path. The impeller shall be constructed of ASTM A339 ductile cast iron. The impeller and volute both shall be equipped with AISI type 316 stainless steel wear rings that are heat treated to differing Brinell hardness to prevent friction welding. The pump is capable of passing 3.1 inch diameter solid nondeformables without clogging. Also, pump-out vanes which shall be located on the back side of the impeller help reduce pressure on the lower mechanical seal.

M. MOTOR SPECIFICATIONS

1. The motor shall be oil filled with pure dielectric type transformer grade oil (or food grade quality oil) and the oil is positively circulated through the windings picking up the heat generated as a result of operation. The oil shall be circulated through a spiral shaped heat exchanger located just above the tope shroud of the pump impeller and the heat dissipation occurs to the pumped fluid in the volute. The cooled oil is then returned to the top of the motor housing via an external oil return line to the closed circuit sealed cooling system. The motor shall be integral to the pump and shall be designed for wet or dry pit installation. The squirrel cage induction-type motor shall be of NEMA Class F insulation rating using NEMA Class H slot liners. The copper wound stator shall be triple-dipped in epoxy enamel to withstand a temperature of 155 degrees centigrade as defined in NEMA Standard MG-1. This motor meets NEMA Type B design category requirements for design and construction. The rotor shall be both statically and dynamically balanced after finish fabrication. The rotor uses iron punchings with die cast aluminum amortisseur bars for efficiency and compact design.

2. The shaft material shall be AISI type 420 stainless steel with a diameter of 250 millimeters at the lower bearing/mechanical seal location. The bearings shall be all spherical ball rolling type with 50,000 hour L10 life at the pumping design point. The bearings are constantly submerged and lubricated in the cooled oil provided by the oil circulation system which assures long trouble free operation. The lower or thrust bearing shall be further protected by a short shaft overhang which limits deflections of the shaft. The overhang (distance from thrust bearing to hub of impeller) shall be no more than 2.5 times the shaft diameter. The shaft overhang also provides unsurpassed rigidity for the mechanical shaft seal as both features are directly related.

3. The mechanical shaft seal shall be a balanced tandem-type "Enclosed Block" design which locates both upper and lower sets of seal faces in one compact AISI type 316 stainless steel casing. The o-rings used in the Enclosed Block Seal shall be all circular cross section neopreame material providing sealing protection to equivalent submergence depths of 300 feet. The seal faces shall be made of high quality silicon-carbide. The seal faces shall be held in place by two independent sets of eight (8) AISI type 316 stainless steel coil springs immersed in an oil bath. As each set of eight (8) coil springs shall be equally spaced around the shaft, a balanced spring force is exerted upon the seal faces, which is required if the mechanical seal is to be considered "balanced". They shall be completely isolated from the pumped media on the impeller side and from the oil cooled stator housing on the motor side. The seal faces and springs shall be contained inside an isolated mechanical seal chamber that shall be oil filled with external provisions for checking and refilling the chamber. The oil in the seal oil chamber shall be separate from the oil in the stator chamber as seal oil chamber oil should only be checked periodically for proper level and changed only during overhauls.

4. The power and control cables shall enter the motor housing through an isolated chamber that is completely isolated from the oil filled stator chamber. The Hypalon power and control cable jackets shall be sealed via a compressible Buna-N grommet flanked by washers forming the first isolation point of the assembly. The cables shall be terminated on the individually o-ringed brass terminal lugs of the terminal board thereby sealing the cable entry chamber completely from the stator housing to the extent that any and all moisture that happens to find its way into the cable entry chamber is trapped there. The terminal board is designed to short out in the event that moisture has found its way into the cable entry chamber thus signaling that the motor must have service without the costly complete overhaul that occurs with pumps that do not have isolated terminal boards.

5. The motor shall be designed with a service factor of 1.25 over and above the nameplate horsepower as standard. The motor shall be warranted for ten (10) evenly spaced starts per hour when used with across the line starters, and unlimited starts per hour when used with variable frequency drives.

N. PUMP WET PIT CONNECTION

1. Each pump shall be supplied with a universal coupling constructed of ASTM A48, Class 30 grey cast iron which bolts to the pump discharge flange. This coupling slides down the pump guide rail and attaches to the base discharge elbow that shall also be constructed of ASTM A48, Class 30 grey cast iron so that no personnel entry into the wet pit is required to connect the pump coupling to the discharge elbow. The seal of the pump to the elbow shall be accomplished by the cantilevered effect of the coupling being suspended by the rounded fit on top of the discharge elbow. The effect shall be such that sealing forces of the coupling to discharge elbow are 1.5 times higher than the weight of the pump and coupling alone. The cantilever effect also requires that no part of the pump rests directly on the floor of the sump to obstruct flow into the suction eye of the pump. The seal at the coupling to discharge elbow interface shall be made possible by a replaceable Buna-N sealing rubber. This sealing rubber shall be constructed so that it comprises the flat gasket between the pump and coupling and the seal at the coupling to discharge elbow connection. This sealing system must guarantee a positive leakproof seal in the wet pit pump installation.

O. LIFTING DEVICES

1. Each pump shall be provided with a stainless steel lifting chain that is 40 feet long for installation and removal of the pump. The device attaches to the pump handle and locates the pump on the discharge elbow.

2. Pump Guide Rail: Furnish a quantity of 2 guide rails for each pump to permit raising and lowering. The guide rail(s) shall be constructed of stainless steel

that are 80 feet long which will reach from the top of the discharge elbow to the upper guide rail holder on the access frame or on the vertical face of the concrete opening. The single guide rail system shall utilize either a T-bar type structural shape or single standard schedule 40 pipe while the dual guide rail system shall utilize two (2) standard schedule 40 pipes as guides.

P. ACCESS FRAME

1. Furnish a quantity of 1, pump access frame(s), complete with hinged aluminum door(s), designed for standard load rating in pounds per square foot capability by the pump manufacturer. Included with the access cover shall be one (1) type 304 stainless steel cable holder. The door(s) of the access frame shall be of safety tread plate design and shall be provided with a recessed lifting handle of cast construction to ease opening.

2. Each pump and motor shall be given the following tests at the factory prior to shipment:

a) The mechanical and electrical integrity of the pump shall be established by the use of physical inspection and the use of a megger for verification of the stator resistance to short circuit.

b) The power leads shall be connected to the motor in accordance to the jobsite voltage and the pump started to verify rotation and no load amp readings. Any undue noise or vibration shall be cause for discontinuing the test and further investigation.

c) If requested, the pump shall be installed in the test tank on a wet pit discharge elbow and complete hydraulic tests conducted. The kW input, power factor, flowrate and head shall be measured and recorded. The pump shall be operated at the duty point for the project and checked for compliance with Hydraulic Institute Standards prior to being certified. The pump shall then be removed and given a physical inspection and additional megger insulation test to reverify the mechanical and electrical integrity. Copies of hydraulic test results are maintained at the factory and supplied when requested.

Q. EQUIPMENT COMPATIBILITY

1. In order to ensure proper performance and compatibility of interacting components within these specifications, all pumps, control panels, access frames, guide rails, and lifting systems shall be the product of one manufacturer or furnished by the pump manufacturer for sole source responsibility.

R. CABLE SEAL

1. The cable entry water seal design shall preclude specific torque requirements to ensure a watertight and submersible seal. The cable entry shall be comprised of a single cylindrical elastomeric grommet, flanked by stainless steel washers, all having a close tolerance fit against the cable outside diameter and the entry inside diameter and compressed by the entry body containing a strain relief function, separate from the function of sealing the cable. The assembly shall bear against a shoulder. The cable entry junction chamber and motor shall be separated by a stator lead sealing gland or terminal board, which shall isolate the motor interior from foreign material gaining access through the pump top. Epoxies, silicones, or other secondary sealing systems shall not be considered acceptable.

S. COOLING SYSTEM

1. Each unit shall be provided with an adequately designed cooling system. Motors are sufficiently cooled by the surrounding environment or pumped media. On units greater than 14 horsepower, a water jacket which encircles the stator housing shall be provided. The water jacket shall be provided with a separate circulation of the pumped liquid. A cooling fluid circulation pump will not be allowed.

2. Cooling media channels and ports shall be non-clogging. Provision for external cooling and flushing shall also be provided.

3. Thermal sensors shall be provided to monitor stator temperatures on units greater than 3.0 horsepower and explosion-proof units. The stator shall be equipped with three thermal switches, embedded in the end coils of the stator winding (one switch in each stator phase). The thermal switch trip setting shall be 125° C. Trip settings higher than 125° C result in reduced stator life and are not considered equal or acceptable. These thermal switches shall be used in conjunction with external motor overload protection and wired to the control panel.

T. WEAR RINGS

1. A replaceable wear ring system shall be installed to provide efficient sealing between volute and impeller. The wear ring shall consist of a stationary ring made of nitrile rubber molded with a steel ring insert that is drive-fitted to the volute inlet. A rotating wear ring which is shrink-fitted to the impeller hub shall be provided on units of 14 horsepower or more.

U. PLUG VALVE

1. All plug valves shall be of the non-lubricated, eccentric type. Port areas shall be at least 80 percent of full pipe area. Valve body construction shall be of

high tinsile strength cast alloy iron conforming to ASTM A126, Class B, with a minimum working Pressure rating of 150 psi. All end connections shall be flanged and shall be faced and drilled in accordance with ANSI B16.1 for 125 pound flanges. Three way valves shall be furnished for the positions shown in the valve schedule.

2. Valve seats shall have a welded-in overlay of not less than 90 percent pure nickel on all surfaces contacting the plug face. All valves shall have stainless steel or phenolic backed Teflon permanently lubricated upper and lower plug stem bushings. Vavles shall be of the bolted bonnet design and shall be designed so that they can be replaced without removing the bonnet from the valve. All nuts, bolts, springs and washers shall be cadmium plated.

3. Valve plugs shall be furnished with resilient Hycar or Buna type rubber compound facings that shall be suitable for use with sewage sludges, and shall be resistant to mineral oils, vegetable oils, and animal fats and grease.

4. Acceptable Manufacturer: DeZurik

5. Manual Valve Actuators:

a) Submerged plug valves shall be equipped with an extended shaft and operating nut for operation form above the tank surface. Also furnish a tee type operating wrench for each group of valves. Furnish and install stem guides and floor boxes as required. Floor boxes shall be Clow F-5690, DeZurik Figure 348, or equal.

b) Actuators on plug valves within the structures shall be of the enclosed worm gear type suitable for running in oil. Actuators shall be submersible with seal provided on all shafts to prevent entry of water into the actuator or leakage of oil from the actuator. Gears and shafts shall be heavy duty and shaft bushing shall be heavy duty and shaft bushing shall be of corrosion-resistant, permanently-lubricated bronze.

c) Actuators shall clearly indicate valve position and an adjustable stop shall be provided to set closing torque. Valve packing adjustment shall be accessible without disassembly of the actuator.

d) Hand wheels or chain wheels shall be furnished as required and as specified hereinbefore, and floor stands for operators shall be provided as shown.

V. CHECK VALVES

1. Check valves for cast iron, ductile iron and steel pipelines shall be swing

type and shall meet the material requirements of AWWA Specification C508. The valves shall be iron body, bronze mounted, single disc, 150 psi working water pressure, nonshock, and hydrostatically tested at 300 psi. Ends shall be 125 lb ANSI B16.1 flanges.

a) When there is no flow through the line the disc shall hang lightly against its seat in practically a vertical position. When open, the disc shall swing clear of the waterway.

b) Check valves shall have bronze seat and body rings, extended bronze hinge pins and bronze nuts on the bolts of bolted covers.

c) The disc seal shall be resilient Buna-N material design for drip-tight shut off. The seal shall be replaceable without special tools.

d) Valves shall be so constructed that disc and body seat may easily be removed and replaced without removing the valve from the line. Valves shall be fitted with an extended hinge arm with outside lever and spring. Springs with various tensions shall be provided and springs approved by the Engineer shall be installed.

2. Acceptable Manufacturer: Golden Anderson

W. "DUCKBILL" ELASTOMERIC CHECK VALVE

A. The check valve shall be designed for a slip-on connection. The check valve shall slip over the end of the 2-inch diameter valve pit drainpipe and attached by the means of a stainless steel clamp. A stainless steel insert shall be installed in the HDPE pipe. The valve shall be one-piece rubber construction with nylon reinforcement and UV protection. The check valve shall be similar or equal to Series TF-2 manufactured by Red Valve Company. The valve shall be designed to withstand a backpressure of 15-feet of water.

X. HYDRANTS

1. Shall be frost-proof with 36-inch bury, 1-inch male outlet, and 1-inch male inlet, with the outlet 36-inches above the ground. The water line from the main to the hydrant shall be 1-inch diameter.

Y. FENCING

1. A new fence shall be installed at the pump station site where shown on the drawing and shall be in accordance with Section 02823 – "Chain Link Fencing and Gates".

2. A 18" x 24", 7 gauge, stainless steel plate with an emergency phone number shall be furnished and installed at a conspicuous location on the fence or control panel.

Z. ACCESS ROAD

1. Access road to the station shall be as shown on the drawing. Stabilization shall be accomplished by constructing a base using granite crusher run stone aggregate composed of 50% screenings and 50% stone, compacted to 6-inch thickness.

AA. SHOP DRAWINGS

1. The Contractor shall submit for review by the Engineer a complete schedule and data of materials and equipment to be incorporated in the work. Submittals shall be supported by descriptive material, such as catalogs, diagrams, performance curves, and charts published by the manufacturer, to show conformance to specification and drawing requirements; model numbers alone will not be acceptable. Complete electrical characteristics shall be provided for all equipment.

2. All shop drawings shall be completely checked and marked accordingly by the Contractor's stamp prior to submitting drawings to the Engineer for review. Shop drawings with insufficient or incomplete data required to indicate compliance with these specifications are not acceptable and will be returned to the Contractor. Where shop drawings are "Make Corrections As Noted", the reviewer has noticed deficiencies in compliance with the contract specifications and drawings. It is understood that corrections indicated will be incorporated by the Contractor in the final product, the operation and maintenance manuals and the shop drawings submitted at the completion of the project. Rejected shop drawings shall not relieve the Contractor from his obligation to complete the project within the time allowed by the contract documents.

3. Upon completion of the project, the Contractor shall provide the Engineer with four (4) complete sets of the final reviewed shop drawings. These four copies shall be in bound form and submitted before final payment is made.

BB. PUMP WARRANTY

1. The pump manufacturer shall warrant the pumps being supplied to the Owner against defects in workmanship and materials for a period of five years under normal use, operation and service. In addition, the manufacturer shall replace certain parts which shall become defective through normal use and wear on a progressive schedule of cost for a period of five (5) years; parts included are the mechanical seal, impeller pump housing, wear ring and ball bearings. The warranty shall be in published form and apply to all similar units.

CC. OPERATION AND MAINTENANCE MANUAL

1. The pump manufacturer shall furnish the Owner with a minimum of six (6) manuals for the pumps installed.

DD. ELECTRICAL

1. Electrical service – Service to the pumping station shall be 3 phase, 4W, 230 volts. Service shall be underground originating in weatherhead on the service pole at the site and terminating in the main breaker.

2. Conduits below grade shall be Schedule 40 PVC and above grade shall be rigid galvanized. Conduits shall be sealed to prevent sewer gases entering the control panel. Sealing shall be accomplished by stuffing both ends of the conduit with duct-seal, or other approved equal.

3. Conductor shall be copper.

4. The neutral conductor of each service shall be grounded to a ground rod system. Grounding conductor shall be sized in accordance with Article 520 of the N.E.C. and shall be installed in non-metallic conduit to points of ground connection.

5. Ground rod system shall consist of three-3/4" x 10" copper weld ground rods. Ground rods shall be installed three feet (3') apart with top of rods twelve inches (12") below grade and shall be interconnected with the bare copper grounding conductor. Connections to ground rods shall be with chemical weld connectors.

a) Running Time Meters – Shall be installed for measuring the elapsed running time for each pump. Meters shall be installed on the face of the control panel with the counter visible when the door or panel is opened. One meter shall be provided for each starter, and it shall be connected to operate simultaneously with the starter that it is monitoring. Meters shall be non-reset type, hermetically sealed, 115 volts, 60 hertz, with a five digit counter registering 1/10 hour and a total range of 99,999 hours.

SEWER PUMP STATION

PART 3. CONSTRUCTION

A. ON-SITE OBSERVATION

1. Town Staff shall have the right to require that any portion of the work be done in his presence and if any work is covered up after such instruction, it shall be exposed by the Contractor for observation. However, if the Contractor notifies Town Staff that such work is scheduled and Town Staff fails to appear within 48 hours, the Contractor may proceed without him. All work done and materials furnished shall be subject to review by Town Staff or Project Representative. All improper work shall be reconstructed and all materials which do not conform to the requirements of the specifications shall be removed from the work upon notice being received from Town Staff for the rejection of such materials. Town Staff shall have the right to mark rejected the materials so as to distinguish them as such.

2. The Contractor shall give the Project Engineer or Project Representative a minimum of 48 hours notice for all required observations or tests. Tests shall be certified by the Design Engineer of Record. Town Staff shall not certify tests, but must witness their execution.

3. It will also be required of the Contractor to keep accurate, legible records of the location of all water lines, service laterals, valves, fittings, and appurtenances. These records will be prepared in accordance with the paragraph on "Record Data" in the Supplementary Conditions. Final payment to the Contractor will be withheld until all such information is received and accepted.

B. HANDLING MATERIALS

1. Unloading: Furnish equipment and facilities for unloading, handling, distributing and storing pipe, fittings, valves and accessories. Make equipment available at all times for use in unloading. Do not drop or dump materials. All materials dropped or dumped will be subject to rejection without additional justification.

2. Handling: Handle pipe, fittings, valves and accessories carefully to prevent shock or damage. Handle pipe by rolling on skids, forklift, or front loader. Do not use material damaged in handling.

C. CONSTRUCTION ALONG HIGHWAYS, STREETS AND ROADWAYS

Install pipelines and accessories along highways, streets and roadways in accordance with the applicable regulations of the County, City, and/or the

Department of Transportation with reference to construction operations, safety, traffic control, road maintenance and repair.

1. Protection of Traffic: Provide and maintain suitable signs, barricades and lights for protection of traffic.

Replace all highway signs removed for construction as soon as possible. Do not close or block any highway, street, or roadway without first obtaining permission from the proper authorities.

Provide flagmen to direct and expedite the flow of traffic.

2. Construction Operations: Perform all work along highways, streets and roadways to least interfere with traffic.

a) Striping: Where the pipe line is laid along road shoulders, strip and stockpile all sod, topsoil and other material suitable for shoulder restoration.

b) Trenching, Laying and Backfilling: Do not open the trench any further ahead of pipe laying operations than is necessary. Backfill and remove excess material immediately behind laying operations. Complete excavation and backfill for any portion of the trench in the same day.

c) Shaping: Reshape damaged slopes, side ditches, and ditch lines immediately after completing backfilling operations. Replace topsoil, sod and any other materials removed from shoulders.

3. Excavated Materials: Do not place excavated material along highways, streets and roadways in a manner which obstructs traffic. Sweep all scattered excavated material off of the pavement.

4. Drainage Structures: Keep all side ditches, culverts, cross drains, and other drainage structures clear of excavated material and free to drain at all times.

5. Maintaining Highways, Streets, Roadways, and Driveways: Maintain streets, highways, and roadways in suitable condition for movement of traffic until completion and final acceptance of the work. Use steel running plate to maintain traffic until pavement replacement is completed.

NOTE: Traffic must be maintained at all times. When one lane is closed, flagmen must be utilized to maintain traffic flow.

Repair all driveways that are cut or damaged immediately. Maintain them in a suitable condition for use until completion and final acceptance of the work.

D. EXISTING UNDERGROUND UTILITIES AND OBSTRUCTIONS

1. It is the responsibility of the Contractor to locate all existing utilities along the path of his construction. The drawings shall indicate underground utilities or obstructions that are known to exist. Where these or unforeseen underground utilities are encountered, the location and alignment of the water main may be changed, upon written approval of Town Staff and Owner, to avoid interference.

E. INSTALLATION

1. Excavation: Excavate a large enough hole to provide sufficient working room around the station. The outside diameter of the Bottom Slab should be at least one foot larger than that of the concrete sections used.

2. Connecting Pipes: Provide connecting holes for the Influent Pipe, Effluent Pipe(s) and Cable Thrulets in accordance with the specification.

3. Backfill: Backfill gradually and evenly around station after concrete and joints have hardened. Compact backfill to minimize post-installation settlement.

4. Top Slab with Access Cover: Diameter of Top Slab shall be as per the drawings. The Access Cover must be cast in place and properly oriented in the Top Slab. See Station Drawings for Pump Model and Access Cover location in relation to the centerline of the station.

5. Automatic Discharge Connection: The Automatic Discharge Connection must be attached to the Bottom Slab at the exact location required relative to the Access Cover.

6. Internal Piping and Manifold: Use proper gaskets, tighten bolts gradually and evenly. In deep stations, install Discharge pipe Brackets to relieve Discharge Connections from overload and intermediate Guide Bar Brackets to prevent Guide Bars from bending.

7. Installation of Pump Units: Lower Pump Units into place along guide bars. Check visually metal-to-metal contact between Volute Flange and Discharge Connection. If necessary, re-check and re-align Discharge Connection(s) and Guide Bars with pumps in place.

8. Grouting: After proper alignment of all components, including metal-to-metal connection of pump flange is established, grout Access Cover, Discharge Connection(s) and Pipe Thrulets. Build up and shape slopes at bottom of station as shown in Station Drawings.

9. Surface Protection: An epoxy-coal tar system is required for all internal

concrete or metallic surfaces. Follow the recommendations in WPCF Manual of Practice No. 17 "Paints and Protective Coatings for Wastewater Treatment Facilities" or the instructions of a reputable manufacturer of protective coating systems, such as Carboline, Koppers, Inertol, Perry-Austen, etc.

10. Storage of Pump Units Prior to Start-Up: It is not good practice to store the Pump Units in the wet pit, especially when long periods between installation and start-up are anticipated. If this practice cannot be avoided, rather than leaving them on their Discharge Connections, secure them and their power cable at some point above any anticipated liquid level. Pay special attention to unprotected open cable ends; seal them off and make sure that they are not submerged or exposed to moisture. Penetration of moisture through the cable may cause breakdown of the insulation, arcing at the pump terminal board, destruction of the Junction Chamber and serious damage to the pump. If in doubt, before start-up, re-check the cable, Cable Entry and Junction Chamber following instructions in the Maintenance Manual under "Electrical Checks". If possible, connect Pumps power cables to Control Panel and during longer periods until the official start-up, start and run the units manually for 30 seconds at least once every two weeks.

F. FIELD QUALITY CONTROL

1. Field Service: A trained person, authorized by the manufacturer and by a nationally approved testing agency (U.L. or F.M.) shall provide start-up service for each pump. All hydraulic, mechanical, and electrical tests shall be run to ensure the proper installation, operation, and maintenance of the pumps.

2. Service Facility: The manufacturer shall have a factory authorized facility for maintenance, and a parts facility shall be located within a 120 mile radius of the pumping installation. This facility shall show evidence of parts and complete pumps in stock. This facility shall routinely stock complete pumps and complete sets of spare parts (wear ring, upper mechanical seal, lower mechanical seal, upper bearing, lower bearing, rotor, stator, 50 feet of power cable, O-rings, terminal board, volute, impeller, and other parts that are required to service these pumps) for each size of pump supplied for this project. The service facility shall have at least two qualified and nationally recognized testing agency (U.L. or F.M.) certified mechanics to service these pumps. This service facility shall have been in service repairing similar pumps for a minimum of five (5) years prior to the bid date. No exception to this paragraph will be allowed.

3. One Year Preventive Maintenance: The manufacturers shall provide one year preventive maintenance for the submersible pumps. Seal oil shall be changed at the end of the first 90 days of operations and again at the end of the one year period. Pumps, walls, floats, and other equipment shall be kept clean of excess grease.

4. Warranty: The pump and motor manufacturer shall warranty the units

against defects in the workmanship and material for a period of five (5) years of 10,000 hours for both parts and labor at a prorated basis.

G. PUMP STATION CONTROL PANEL

1. Power Distribution: The panel power distribution shall include all necessary components and be completely wired with stranded copper conductors rated at 90 degrees C. All conductor terminations shall be as recommended by the device manufacturer.

2. Enclosure: The Enclosure shall be a NEMA 4 304 SS rated enclosure. The enclosure shall be a wall mount type with a minimum depth of 8" sized to adequately house all the components. The door gasket shall be rubber composition with a retainer to assure a positive weatherproof seal. The door shall open a minimum of 180 degrees.

3. Inner Dead Front Door: A polished aluminum dead front shall be mounted on a continuous aircraft type hinge and shall contain a cutout for mounted equipment and provide protection of personnel from live internal wiring. Cutouts for breaker handles shall be provided to allow operation of breakers without entering the compartment. All control switches, indicator pilot lights, elapsed time meters, duplex receptacle and other operational devices shall be mounted on the external surface of the dead front. The dead front shall open a minimum of 150 degrees to allow access to equipment for maintenance. A ¾" break shall be formed around the perimeter of the dead front to provide rigidity.

4. Back Plate: The back plate shall be manufactured of 12 gauge sheet steel and be finished with a primer coat and two (2) coats of baked on white enamel. All hardware mounted to the subpanel shall be accomplished with machine thread tapped holes. Sheet metal screws are not acceptable. All devices shall be permanently identified.

5. Circuit Breakers: All circuit breakers shall be heavy duty thermal magnetic or motor circuit protectors similar and equal to square D type fal. Each motor breaker shall be adequately sized to meet the pump motor operating characteristics and shall have a minimum of 10,000 AMPS interrupting capacity for 230 VAC and 14,000 AMPS at 480 VAC. The control circuit and the duplex receptacle shall individually be controlled by heavy duty breakers.

Circuit breakers shall be indicating type, providing "on-off-trip" positions of the operating handle. When the breaker is tripped automatically, the handle shall assume a middle position indicating "trip".

Thermal magnetic breakers shall be quick-make and quick break on manual and automatic operation and have inverse time characteristics secured through the use of bimetallic tripping elements supplemented by a magnetic trip.

Breakers shall be designed so that an overload on one pole automatically trips and opens all legs. Field installed handle ties shall not be acceptable.

6. Motor Starters: Motor starters shall be open frame, across the line, NEMA rated with individual overload protection in each leg. Motor starter contact and coil shall be replaceable from the front of the starter without removing from its mounted position. Overload heaters shall be block type, utilizing melting alloy spindles and shall have visual trip indication. Overload shall be sized for the full load amperage draw of the pumps. Adjustable type overloads, definite purpose contractors, fractional size starters and horsepower rated contractors or relays shall not be acceptable. Starters shall be full voltage, non-reversing.

7. Transformers: Control transformers shall be provided to provide the 120 VAC and/or 24 VAC for control circuits. Transformers shall be fused on the primary and secondary circuits. The secondaries shall be grounded.

8. Lightning-Transit Protection: A lightning-transit protector with tell-tale warning lights on each phase to indicate loss of protection on the individual phases shall be provided. The device shall be solid state with a response time of less than 5 nanoseconds with withstanding surge capacity of 6500 amperes. Unit shall be instant recovery, long life and have no holdover currents.

9. Phase Monitor: A line voltage rated, adjustable phase monitor shall be installed to sense low voltage, loss of power, reversed phasing and loss of a phase. Control circuit shall deenergize upon sensing any of the faults and shall automatically restore service upon return to normal power.

10. Alarm System: The alarm light shall be a weatherproof-shatterproof red light fixture with a 40 watt bulb to indicate alarm conditions. The alarm light shall be turned on by the alarm level.

The alarm horn shall be mounted on the exterior of the cabinet. The alarm horn shall provide a signal of not less than 90 db at ten feet. An alarm silence switch shall deactivate the alarm horn; however, the alarm light will flash until the alarm condition ceases to exist. At that time, the alarm reset function will reset for normal operation.

11. Level Control System: 24 VAC Regulator System: The control system shall provide for the automatic and manual control and alternation of the pumps to maintain a pumped down condition of the wet well. Levels shall be sensed by float regulators adjusted to the levels depicted on the plans. The four float switches shall

sense the "off", "lead", "lag", and "alarm" levels. As the level in the wet well rises the lead pump, as determined by the alternator, shall start and pump the station to the "off" position. In the event the incoming flow exceeds the capacity of the lead pump, the lag pump shall start and both pumps shall run to the off level. The alternator shall switch when the off level is reached. If the level continues to rise, alarm functions shall be excited. In the event the off float regulator fails, the system fails, the system shall pump between level 2 & 3 with the lead level becoming the off level. The system shall provide an indication of the float regulator. Control systems contingent on the off float switch being activated to provide control power are not acceptable. The control system shall include but not be limited to the ancillary equipment listed below.

Unit consisting of a plug-in programmed solid state controller. The controller shall include the following listed functions:

a) Alternator
b) Hand-off-auto switches
c) Time delay relays
d) Alternator selector switch
e) Float indicating LED's
f) Output LED's
g) Alternator test switch

All AC inputs and outputs shall be transient protected to eliminate introduced transients by inductive loads. The controller shall be UL listed as a control device with intrinsically safe output level of 630 microwatts at 5 VDC applied to the float regulators assuring adherence to UL 913 publication for division 1, Class 1, intrinsically safe apparatus.

12. Control Operation: On a rising liquid level, the "off" float regulator shall close, locking the pumps to a common "pumps off" level when the lead float closes, the lead pump shall be activated and run until the "off" level. If the levels continue to rise, the lag pump shall be activated and both pumps shall run to the "off" level. If the high level is reached, an alarm signal shall be activated for the alarm equipment.

In the event of a failure of "off-lead-lag" float switches the control system shall provide operation of the pump station as shown below. In the event of a power failure the system shall resume normal operation upon return of power and shall time delay the pumps on to prevent load cycling.

13. Ancillary Equipment: The following ancillary equipment will be required as part of the control system.

14. HOA Switches: A three position HOA switch shall be provided for each

pump. The switch shall be NEMA 4X rated with 10 AMP contacts. A position indicating legend plate shall be provided. The HOA switches shall be mounted on the inner dead front door.

15. Run Indicators: A green run pilot light indicator shall be mounted on the dead front door.

16. Elapsed Time Meter: An elapsed time meter shall be mounted on the dead front door. The meter shall operate on 120 VAC, shall indicate in hours (6 digits) and tenths and shall be non-resetable.

17. Alternator: The alternator shall be a plug in solid state unit with lead-lag-auto selector and test switches. The units shall operate on 120 VAC and provide DPDT Ten AMP rated contacts. Two LEDs shall indicate the next position to run as lead pump.

18. Duplex Receptacle: The control panel shall have a 120V/15A duplex receptacle mounted in the inner dead front door.

SEWER FORCE MAIN

PART 1 DESIGN GUIDELINES

A. GENERAL

a. The following water system design guidelines are based on Federal, State, and local health requirements and the Town of Ridgeland's engineering design criteria.
b. These design guidelines are applicable to all developments including, but not limited to, residential, commercial, and industrial developments and subdivisions requiring water service from the Town of Ridgeland.

B. SYSTEM DESIGN CRITERIA

a. Minimum force main pipe size shall be 4 inches in diameter.
b. Design velocity shall be 2 feet per second.
c. Maximum pipe size shall be as to maintain velocity at 2 feet per second and minimize pump head.
d. Hazen and Williams design coefficients:
   i. PVC: C = 140
   ii. Ductile Iron: C = 120

C. AIR RELEASE VALVES

a. Provide air release valves at high points in the force main vertical profile.
b. Design force main to minimize the number of air release valves.
c. Provide air release valves at 1000 foot intervals where force main is installed at no slope.

D. PLUG AND CHECK VALVES

a. For force mains greater than 5000 feet in length, provide a plug valve at the half-way point, or every 4000 feet.
b. Where a proposed force main is tying into an existing force main, provide plug and check valves on both mains.
c. Design force mains to reduce connections to other force mains. Limit connections to gravity sewer manholes when possible.
d. Locate valves in suitably-sized precast vaults with double-leaf, traffic-rated aluminum hatch doors. See Section 5 for valve pit design.
e. See Section 5 for valve specifications.

E. FORCE MAINS ENTERING MANHOLES

a. Force mains shall enter manholes no more than 2 feet above the manhole invert.
b. Force main shall direct flow to the downstream pipe of the manhole.

F. SEPARATION OF SEWER FORCE MAINS AND WATER MAINS

a. Where possible, locate sewer force mains at least 10 feet away, horizontally, from water mains.
b. Should 10 feet not be practical, then pressure sewer may be located closer provided:
    i. It is laid in a separate trench.
    ii. It is laid in the same trench with the water main with the water main at one side on bench of undisturbed earth.
    iii. In either of the above cases, the force main must be a minimum of 18 inches below the water pipe measured from outside to outside.
    iv. Maximize the distances between the sewer line and the potable water main and the joints each;
    v. Use pipe materials which meet the requirements for drinking water lines as specified in R61-58.4(D)(1) for sewer lines.
    vi. Allow enough distance to make repairs to one of the lines without damaging the other.
c. Where sewer force mains cross over or under water lines, maintain 18 inches minimum clearance between outside edges of the two pipes. Both pipes shall consist of ductile iron pipe.

G. THRUST BLOCK DESIGN

a. Maximum soil pressure: 2000 lbs/sqft
b. Minimum water pressure: 150 psi
c. Thrust blocks shall only be used where restrained joint assemblies are not practical.

H. COVER

a. Provide suitable cover on all sewer force mains. Minimal cover depth shall be as follows:
    i. Less than 8 inches in diameter: 36 inches cover
    ii. 10 inches and 12 inches: 36 inches cover
    iii. 14 inches and larger: 48 inches cover
b. All piping located within the rights-of-way of the South Carolina Department of Transportation shall have a cover as indicated above or 36 inches below the elevation of the road, whichever is greater.

c. Special conditions other than the above may be requested in writing to Town Staff.

I. DUCTILE IRON PIPE LOCATIONS

a. Provide ductile iron pipe where sewer force mains:

i. Crosses over or under a water main.
ii. Crosses over or under a storm drainage line.
iii. Crosses creeks, rivers, or other water bodies.
iv. Is installed in a casing.
v. Where an air release valve is installed in the line.
vi. Where cover is less than indicated in the above chart.

SEWER FORCE MAIN

PART 2 MATERIALS

A. DUCTILE IRON PIPE

a. Ductile Iron Pipe – Ductile iron pipe shall be manufactured in accordance with ANSI/AWWA C151/A21.51, latest revision. Ductile iron pipe shall be of thickness according to ANSI/AWWA C150/A21.50, latest revision, for Laying Condition 2, and shall be Class 50 minimum.

b. Joints – Joints shall conform to ANSI/AWWA C111/A21.11, push-on-type as described in latest revision, unless otherwise shown.

c. Fittings – Fittings shall conform to ANSI/AWWA C110/A21.10, latest revision, and shall be mechanical-joint type unless otherwise shown.

d. Lining – Lining for ductile iron pipe and fittings shall be Protecto 401.

e. Exterior Coating – Exterior Coating shall be a petroleum asphaltic coating one mil thick in accordance with ANSI/AWWA C110/A21.10, latest revision, unless otherwise shown and/or specified.

B. PVC PIPE

PVC pipe shall be Underwriters' Laboratories approved and listed. It shall meet or exceed AWWA C900 with the following supplemental specifications:

a. Pressure Pipe – Pipe 4 inches and greater shall be Class 150 with Dimension Ratio 18 or lower (thicker). Pipe less than 4 inches shall be Class 200 with Dimension Ratio 21 or lower conforming to ASTM D2241.

b. Routine Hydrostatic Proof Test Requirements – Each piece of pipe shall be tested at 4 times rated pressure class.

c. Outside Diameter – Pipe shall have cast iron pipe outside diameter.

d. Joints – Pipe shall have elastomeric-gasket integral bell end. Bell section shall have a thickened wall. Gasket groove wall thickness shall meet or exceed the thickness of the pipe barrel.

e. Fittings – Ductile iron or cast iron fittings, if used, shall be mechanical-join type conforming to ANSI/AWWA C110/A21.10, latest revision, with cement mortar lining and seal coat in accordance with ANSI/AWWA C104/A21.4, and one mil

thick petroleum asphaltic exterior coating in accordance with ANSI/AWWA C110/A21.10, latest revision, unless otherwise shown.

f. Affidavit of Compliance – The manufacturer shall furnish an affidavit that all materials delivered comply with the requirements of these standard and supplemental specifications.

C. COUPLINGS AND FITTINGS

a.

b. Couplings and fittings shall be furnished by the pipe manufacturer and shall accommodate the pipe for which they are to be used. They shall have the same minimum pressure rating as the pipe. Coupling method shall allow for expansion or contraction of each pipe section to be taken up at each end of the pipe. Couplings shall permit 5 degree deflection (2- ½ degrees on each side) of the pipe without any evidence of infiltration, exfiltration, or breaking.

D. FIBER GLASS COMPOSITE PIPE

Fiber glass composite pipe with integral bell and spigot joints shall be composed of an interior core of PVC encased in continuous woven fiber glass bonded with epoxy resin conforming to ANSI/AWWA C950.

a. Pipe – Pipe shall be Class 150 unless specifically noted otherwise on the Drawings.

b. Routine Hydrostatic Proof Test Requirements – Each piece of pipe shall be tested at 2 times rated pressure class.

c. Outside Diameter – Pipe shall have and outside diameter equal to the outside diameter of cast iron pipe.

d. Joints – Pipe shall have an outside diameter equal to the outside diameter of cast iron pipe.

e. Fittings – Fittings shall have elastomeric-gasket, integral bell and spigot ends. Gasket groove wall thickness shall meet or exceed the thickness of the pipe barrel.

f. Affidavit of Compliance – The manufacturer shall furnish an affidavit that all materials delivered comply with the requirements of this standard and supplemental specification.

g. Couplings and Fittings – Couplings and fittings shall be furnished by the pipe manufacturer and shall accommodate the pipe for which they are to be used. They shall have the same minimum pressure rating as the pipe. Coupling method shall allow for expansion or contraction of each pipe section to be taken up at each end of the pipe. Couplings shall permit 5 degree deflection (2- ½ degrees on each side) of

the pipe without any evidence of infiltration, exfiltration, cracking or breaking.

E. VALVES

Valves shall conform to Section 5.2 – Sewer Pump Station Materials.

a. Plug Valves – Manufacturer shall be DeZurik.
b. Check Valves – Manufacturer shall be Golden Anderson.

F. SEWAGE COMBINATION AIR VALVES

a. Sewage combination air valves shall be provided at points shown on the force main and shall be 2-inch size unless noted otherwise. Body shall be close grained cast iron with all internal parts and float of stainless steel. The valves shall be capable of venting air from the pipeline while filling, permit air to reenter the pipeline to reduce the potential for vacuum on the system, and release air from the pipeline while pipeline is pressurized. The sewage combination air valve shall be a single body, double orifice design. Valves shall be APCO Series 440 SCAV, Empire Figure No. 942, or equal.

SEWER FORCE MAIN

PART 3 CONSTRUCTION

A. INSTALLATION

Pipe and fittings shall, unless otherwise directed, be unloaded at the point of delivery, hauled to and distributed at the site of the project by the Contractor. They shall at all times be handled with care to avoid damage. In loading and unloading, they shall be lifted by hoists or slid or rolled on skidways in such a manner as to avoid shock. Under no circumstances shall they be dropped. Pipe handling on skidways must not be skidded or rolled against pipe already on the ground. In distributing the material at the site of the work, each piece shall be unloaded opposite or near the place where it is to be laid in the trench. Pipe shall be placed on the site of the work parallel with the trench alignments and with bell ends facing the direction in which the work will proceed unless otherwise directed. The interior of all pipes, fittings and other accessories shall be kept free from dirt and foreign matter at all times.

Cutting pipe for inserting fittings, or closure pieces, shall be done in a neat and workmanlike manner without damage to the pipe. Unless otherwise directed, pipe shall be laid with the bell ends facing the direction of laying. Wherever necessary to deflect the pipe from straight line, whether in the vertical or horizontal plane to avoid obstructions, the degree of deflection shall be in accordance with manufacturer's instructions. No pipe shall be laid in water or when the trench condition or the weather is unsuitable for such work. Installation shall be in accordance with manufacturer's instructions.

a. Ductile Iron Pipe

Proper implements, tools and facilities shall be provided and used by the Contractor for the safe prosecution of the work. All pipe and fittings shall be carefully lowered into the trench piece by piece by means of derrick, ropes or other suitable tools or equipment in such a manner as to prevent damage to the pipe. Under no circumstances shall pipe or accessories be dropped into the trench. Before lowering and while suspended, pipe shall be rejected. All foreign matter or dirt shall be removed from the inside of the pipe before it is lowered into its position in the trench and it shall be kept clean by approved means during and after laying. Care shall be taken to prevent dirt from entering the joint space. At all times when pipe laying is not in progress, the open ends of the pipe shall be closed by approved means and no trench water shall be permitted to enter the pipe.

b. PVC and Fiber Glass Composite

Pipe shall be installed in accordance with ASTM D2321. Excavation, bedding and backfill shall be as specified in Section 02315. Bedding shall be Class I, II, and III.

B. BLOCKING AND ANCHORING

a. Thrust blocks shall bear directly against the undisturbed trench wall and shall be constructed using 2,500 psi concrete. Thrust blocking shall be arranged so that it will not interfere with reworking joints should such work become necessary.

C. HYDROSTATIC TESTS

a. The Contractor shall provide all necessary equipment and shall perform all work required in connection with the tests. Each section shall be tested by hydrostatic pressure of 150 pounds per square inch. Each section shall be slowly filled with water, care being taken to expel all air from the pipes. If necessary, the pipe shall be tapped at high points to vent the air. The required pressure as measured at the point of lowest elevation shall be applied for not less than two hours and all pipe, fittings, valves, hydrants and joints shall be carefully examined for defects. All defective joints shall be repaired or replaced.

D. LEAKAGE TEST

a. Design and construction of force mains must be such that they satisfy a leakage test in accordance with AWWA C-600 (DIP) or AWWA C-605 (PVC).

b. A leakage test shall be conducted after the pressure test has been satisfactorily completed. The duration of the leakage test shall be 2 hours and during the test the main or section of the main under test shall be subjected to apressure of 150 psi based on the lowest point in the line or section under test, and connected to the elevation of the test gauge. Leakage is defined as the quantity of water to be supplied into the newly laid pipe or any valved section thereof, necessary to maintain the specified leakage test pressure after the air has been expelled and the pipe has been filled with water at the test pressure. No pipe installed will be accepted until the leakage is less than the number of gallons per hour as determined by the formula:

$$L = \frac{S \times D \times (P)^{1/2}}{133{,}200}$$

L=allowable leakage in gallons per hour.
S= length of pipe tested in feet.
D=the nominal diameter of the pipe in inches.
P=the average test pressure during the leakage test in pounds per square inch gauge.

Should any test of pipe laid disclose leakage greater than above specified, the Contractor shall at his own expense, locate and repair the defective joints until leakage is within the specified allowance.

E. MYLAR TAPE

a. Mylar detectable maintenance tape shall be installed 6 inches below the top of the trench above all force mains where non-metallic pipe is used. The tape shall be 2 inches wide, of blue color and have imprinted on the tape "Caution-Force Main Below". The tape shall be a printed foil warning tape encased in mylar and shall be easily detected by electronic pipe locators. The tape shall be laid the entire length of the trench.

F. TRACING WIRE

a. Tracer wire will be installed on the top of the pipe and looped up to surface level in all valve boxes and at all service laterals. Tracer wire shall be taped to the top of pipelines at a minimum of 5 ft intervals in a uniform, continuous manner. This tracing wire system shall be checked and tested by the Contractor, in the presence of Town Staff, prior to acceptance of the force main installation. All equipment, meters, detectors, etc., needed for testing shall be furnished by the Contractor.

EXCAVATION, TRENCHING, AND BACKFILL

PART 1 GENERAL

A. REFERENCES

a. American Society for Testing and Materials.

B. TESTING SERVICES

a. The Contractor shall obtain the service of a certified testing service to perform all compaction tests specified herein. The cost of these services shall be at the Developer's expense.

b. Soil testing shall be performed by an accredited testing laboratory selected by the Contractor and approved by Town Staff. Tests shall be performed in accordance with applicable ASTM or AASHTO standard methods, unless otherwise specified.

c. All materials to be used in the work shall be tested prior to the use to show conformance with the requirements of these specifications. Test reports shall be delivered to Town Staff in duplicate prior to use of any material in the work.

d. Materials being used in the work, which have been tested previously, may be subjected to further tests from time to time and may be rejected if found defective. Rejected materials shall be removed from the project immediately, notwithstanding the results of former tests to which they have been subjected.

e. Soil tests shall be performed on sub-grades prior to the placement of fill or backfill materials. Tests shall also be performed immediately after the placement of each layer of fill or backfill materials to show conformance with the field density and optimum moisture requirements of these specifications. Not less than one set of tests shall be performed for every 800 sq. ft. of area for each layer. No additional layers shall be placed until the density of each layer has been approved.

f. If Town Staff determines, based on tests reports and inspections, that sub-grades or layers which have been placed are below the specified density, the Contractor shall provide additional compaction and testing.

C. PROTECTION

a. Sheeting and Bracing

1. The Contractor shall furnish, put in place, and maintain such sheeting and bracing as may be required to support the sides of excavations, to prevent any movement which could in any way diminish the ridge of the excavation

below that necessary for proper construction, and to protect adjacent structures from undermining or other damage. If Town Staff is of the opinion that at any points sufficient or proper supports have not been provided, he may order additional supports put in at the expense of the Contractor, and compliance with such order shall not relieve or release the Contractor from his responsibility for the sufficiency of such supports. Care shall be taken to prevent voids outside of the sheeting, but if voids are formed, they shall be immediately filled and rammed. Where soil cannot be properly compacted to fill a void, lean concrete shall be used as backfill. Sheeting and Bracing requirements are further defined in OSHA Standards, Subpart P, Part 1926 of the Code of Federal Regulations.

2. The Contractor shall construct the sheeting to the extent he deems it desirable for his method of operation. Sheeting shall be plumb and securely braced and tied in position. Sheeting and bracing shall be adequate to withstand all pressures to which the trench will be subjected. Any movement or bulging which may occur shall be corrected by the Contractor at his own expense so as to provide the necessary clearances and dimensions.

3. Where sheeting and bracing is required to support the sides of excavations, the Contractor shall engage a Professional Engineer, registered in the State of South Carolina, to design the sheeting and bracing. The sheeting and bracing installed shall be in conformity with the design, and certification of this shall be provided by the Professional Engineer.

4. The Contractor shall leave in place to be embedded in the backfill all sheeting and bracing which Town Staff may direct him in writing to leave in place at any time during the progress of the work for the purpose of preventing injury to structures, utilities, or property, whether public or private. Town Staff may direct that timber used for sheeting and bracing be cut off at any specified elevation. All timber sheeting to be left in place shall be treated.

5. All sheeting and bracing not left in place shall be carefully removed in such manner as not to disturb utilities, or property. All voids left or caused by withdrawal of sheeting shall be immediately refilled with sand by ramming with tools especially adapted to that purpose, or otherwise as acceptable to Town Staff.

6. The right of Town Staff to order sheeting and bracing left in place shall not be construed as creating any obligation on his part to issue such orders, and his failure to exercise his right to do so shall not relieve the Contractor from liability for damages to persons or property occurring from or upon the work on the part of the Contractor to leave in place sufficient sheeting and bracing to prevent any caving or moving of the ground.

7. No sheeting is to be withdrawn if driven below mid-diameter of any pipe, and under no circumstances shall any sheeting be cut off at a level lower than 1 ft above the top of any pipe.

b. Dewatering and Drainage

1. The Contractor shall at all times during construction provide and maintain proper equipment and facilities to remove all water entering excavations, and shall keep such excavations dry so as to obtain a satisfactory undisturbed sub-grade foundation condition until the fills, structures or pipes to be built thereon have been completed to such extent that they will not be floated or otherwise damaged by allowing water levels to return to natural levels. The Contractor shall engage a Geotechnical Engineer, Registered in the State of South Carolina where required, to design the dewatering system. The Contractor shall submit to Town Staff for review the design of the dewatering systems prior to commencing work.

2. The Contractor shall furnish, install, maintain, operate and remove a temporary dewatering system consisting of trenches, sump pits, deep wells, well points, or other methods as required to lower and control the groundwater level so that the pipes may be installed in the dry. The Contractor shall assume full responsibility for the design and installation of an adequate dewatering system. The Contractor shall, at his own expense, correct all damage resulting from inadequacy of the dewatering system or from flooding of the construction site from other causes.

3. The Contractor shall maintain the water level below the excavated area for the various phases of the work continuously and shall make such provisions as may be necessary to avoid interruptions due to weather, labor strikes, power failures, or other delays. He shall provide and have ready for immediate use at all times diesel or gasoline powered standby pumping units to serve the system in case of failure of the normal pumping units.

4. Piping and boiling, or any form of uncontrolled seepage, in the bottom or sides of the excavation shall be prevented at all times. If for any reason the dewatering system is found to be inadequate to meet the requirements set forth herein, the Contractor shall make such additions, changes and/or replacements as necessary to provide a satisfactory dewatering system.

5. Dewatering shall at all times be conducted in such a manner as to preserve the undisturbed bearing capacity of the sub-grade soils at proposed bottom of excavation. Well or sump installations shall be constructed with proper sand filters to prevent drawing of finer grained soil from the surrounding ground.

6. Water entering the excavation from surface runoff shall be collected in shallow ditches around the perimeter of the excavation, drained to sumps,

and pumped from the excavation to maintain a bottom free from standing water.

7. The Contractor shall take all additional precautions to prevent uplift during construction. The Contractor shall maintain the groundwater level below the pipe so flotation is prevented.

8. Drainage water shall be disposed in accordance with applicable SCDHEC and OCRM standards. A copy of all such permits shall be supplied to Town Staff prior to commencement of work.

9. Flotation shall be prevented by the Contractor by maintaining a positive and continuous operation of the dewatering system. The Contractor shall be fully responsible and liable for all damages which may result from failure of this system.

10. Removal of dewatering equipment shall be required; the material and equipment constituting the system, shall be removed by the Contractor.

11. The Contractor shall take all necessary precautions to preclude the accidental discharge of fuel, oil, etc. in order to prevent adverse effects on groundwater quality.

c. Culverts and Ditches

1. Protect drainage culverts from damage. If damaged, restore to satisfactory condition.

2. If it is necessary to remove a culvert, do not replace until the proposed pipeline is installed and trench backfilled and compacted to the sub-grade of the culvert. Replace culverts to the previous line and grade unless directed by SCDOT Encroachment Permits or Town Staff.

3. Backfill minor drainage ditches so that the upper one foot of material between ditch banks is topsoil, loam, or clay.

4. Compact the material for the full ditch width to a minimum of 95% of maximum density as determined by ASTM D 1557.

5. Ditches steeper than 2:1 slope shall be protected and reinforced with a synthetic fiber or grid material. Contractor has the option not to use reinforcement for slopes 2:1 or flatter. Correct any ditch erosion occurring as a result of pipeline construction at no cost to the Owner.

D. JOB CONDITIONS

a. Existing Utilities

1. Locate existing underground utilities in the areas of work. If utilities are to remain in place, provide adequate means of protection during earthwork operations.

2. Should uncharted, or incorrectly charted, piping appear in the excavation, consult Town Staff of such piping or utility immediately for directions.

3. Cooperate with Owner and utility companies in keeping respective services and facilities in operation. Repair damaged utilities to satisfaction of utility owner.

b. Protection of Persons and Property

1. Barricade open excavations and post with warning lights. Operate warning lights as recommended by authorities having jurisdiction.

2. Protect structures, utilities, sidewalks, pavements, and other facilities from damage caused by settlement, lateral movement, undermining, washout and other hazards created by earthwork operations.

E. SUBMITTALS

a. Submit to Town Staff for review the proposed methods of construction, including dewatering, excavation, filling, compaction, and backfilling for the various portions of the work. Review shall be for method only. The Contractor shall remain responsible for the adequacy and safety of the methods.

b. Submit to Town Staff for review in representative samples of each type of proposed fill material weighing approximately 50 lbs at least 15 days prior to the date of anticipated use of such material.

PART 2. PRODUCTS

A. MATERIALS

a. Backfill materials shall be natural or processed mineral soils, blasted and crushed rock, or masonry rubble. Fill materials shall be free of all organic material, trash, snow, ice, frozen soil or other objectionable materials. Clay soils having a natural in-place water content in excess of 30 percent are considered unsuitable for stockpiling and/or future use. Fill materials to be used have been classified under categories specified below.

b. Embedment materials listed here include a number of processed materials plus the soil types defined by the USCS Soil Classification Systems in ASTM D2487. These materials are grouped into categories according to their suitability for this application:

1. Class I: Angular 6 to 40 mm (1/4 to 1-1/2 inches), graded stone including a number of fill materials that have regional significance such as coral, slag, cinders, crushed stone, and crushed shells.

2. Class II: Coarse sands and gravels with maximum particle size of 40 mm (1-1/2 inches), including variously graded sands and gravels containing small percentages of fines, generally granular and non-cohesive, either wet or dry. Soil types GW, GP, SW and SP are included in this class.

3. Class III: Fine sand and clayey gravels, including fine sands, sand-clay mixtures, and gravel-clay mixtures. Soil types GM,GC, SM and SC are included in this class.

4. Class IV: Silt, silty clays and clays including inorganic clays and silts of medium to high plasticity and liquid limits. Soil types MH, CH and CL are included in this class. These materials are not to be used for bedding, haunching or initial backfill.

5. Class V: This class includes the organic soils OL, OH and PT as well as soils containing frozen earth, debris, rocks larger than 40 mm (1-1/2 inches) in diameter, and other foreign materials. These materials shall not be used for bedding, haunching and initial backfill.

c. Granular Fill, shall be sound, hard, durable crushed stone meeting the following gradation requirements and shall conform to ASTM C33, Size No. 57.

Sieve Size	Percent Passing by Weight
1-1/2-in	100
1-in	90-100
1/2-in	26-60
No. 4	0-7
No. 8	0-3

d. Riprap shall be sound, durable rock which is roughly rectangular shape and of suitable quality to insure permanence in the condition in which it is to be used. Rounded stones, boulders, sandstone or similar soft stone will not be acceptable. Material shall be free from overburden, spoil, shale, and organic material. Each load of riprap shall be reasonably well graded from the smallest to the maximum size specified and shall conform to State of South Carolina Department of Transportation. Riprap shall consist of a durable field or quarry stone shaped

roughly as rectangular blocks. Riprap shall weigh between 50-100 lbs. each with at least 60 percent weighing over 100 lbs. and no more than 10 percent shall weigh 50 lbs. or less. One dimension of each exposed riprap shall be not less than 12-in. The joints in the riprap shall be filled with spalls of suitable size to construct a solid, stable slope, free from large voids and defects.

e. Sand shall conform to ASTM Standard C33 for concrete sand.

PART 3. EXECUTION

A. EXCAVATION

a. The Contractor shall proceed with caution in the excavation and preparation of the trench so that the exact location of underground structures in the trench zone may be determined before being damaged. He shall be held responsible for the repair or replacement of such structures when broken or otherwise damaged because of his operations.

b. The Contractor shall make explorations and excavations to determine the location of existing underground structures.

c. Utilities and other piping shall be laid in open trenches. Trenches shall be excavated to the designated lines and grades, beginning at the outlet end and progressing toward the upper end in each case. Trenches for pipe shall be shaped to the lower 1/3 of the pipe and provide uniform and continuous bearing. Bell holes shall be dug to allow ample room for working fully around each joint.

d. Trenches shall be of minimum width to provide ample working space for making joints and shall be not less than 8 inches or more than 12 inches. Sides of trenches shall be closely vertical to top of pipe and shall be sheet piled and braced where soil is unstable nature. Above the top of the pipe, trenches may be sloped. The ridge of the trench above this level may be wider for sheeting and bracing and the performance of the work.

e. Trenches shall be excavated on the alignments shown on the approved plans, and to the depth and grade necessary to accommodate the pipes at the elevations shown. Where elevations of the invert or centerline of a pipe are shown at the ends of a pipe, the pipe shall be installed at a continuous grade between the two elevations.

f. Excavation in excess of the depth required for proper shaping shall be corrected by bringing to grade the invert of the ditch with compacted coarse, granular material. Bell holes shall be excavated to relieve bell of all load, but small enough to insure that support is provided throughout the length of the pipe barrel.

g. Excavation in excess of the depths required for manholes and other structures shall be corrected by placing a sub-foundation of #57 stone at a depth of 12 inches,

minimum.

h. If trenches are excavated to widths in excess of those specified, or if the trench walls collapse, the pipe shall be laid in accordance with the next better class of bedding.

B. TRENCHES

a. Trenches shall be maintained in a safe condition to prevent hazardous conditions to persons working in or around the trench.

b. Braced and sheeted trenches and open trenches shall comply with all State and Federal Laws and Regulations, and local ordinances relating to safety, life, health and property.

c. The top portion of the trench may be excavated with sloping or vertical sides to any width which will not cause damage to adjoining structures, roadways, utilities, etc. The bottom of the trenches shall be graded to provide uniform bearing and support each section of the pipe on undisturbed soil every point along its entire length, except for the portions of the pipe sections excavated for bell holes and for the sealing of pipe joints. Bell holes and depressions for joints shall be dug after the trench bottom has been graded and in order that the pipe rests upon the trench bottom for its full length and shall be only of such length, depth and width for making the particular type of joints. The bottom of the trench shall be rounded so that at least the bottom one-third of the pipe shall rest on undisturbed earth for the full length of the barrel as jointing operations will permit. This part of the excavation shall be done manually only a few feet in advance of the pipe laying by workmen skilled in this type of work.

d. The sides of all trenches and excavation for structures shall be held by stay bracing, or by skeleton or solid sheeting and bracing according to conditions encountered, to protect the excavation, adjoining property and for the safety of personnel. Bracing and shoring may be removed when the level of the backfilling has reached the elevation to protect the pipe work an adjacent property. When sheeting or shoring above this level cannot be safely removed, it may be left in place. Timber left in place shall be cut off at least 2 feet below the surface. No sheeting below the level of the top of the pipe may be removed.

C. PILING EXCAVATED MATERIALS

a. All excavated material shall be piled in a manner that will not endanger the work and that will avoid obstructing roadways.

D. LIMIT TO LENGTH OF OPEN TRENCH

a. Pipe trenches shall not be excavated more than 400 feet in advance of pipe laying and all work shall be performed to cause the least possible inconvenience to the

public. Adequate temporary bridges or crossings shall be constructed and maintained where required to permit uninterrupted vehicular and pedestrian traffic.

E. REMOVAL OF UNSUITABLE MATERIAL

a. When the trench is excavated to the plan depth, and soft or other material not suitable for bedding purposes is encountered in the trench, the Contractor shall immediately notify Town Staff for inspection and approval of backfill methods and materials.

F. BEDDING OF DUCTILE IRON PIPE

a. Pipe shall be laid on foundations prepared in accordance with ANSI/AWWA C600 as modified herein, and in accordance with the various classes of bedding required by the trench width and trench depth for the size of pipe to be laid. Bedding shall be included in the appropriate unit price bid for ductile iron pipe.

b. Embedment shall be of the type shown approved plans or stated in the specifications for the utility system in which it is used. Type 1 embedment is not permitted without written approval of Town Staff.

c. Bell Holes: Bell holes shall be provided in all classes of bedding to relieve pipe bells of all loads, but small enough to insure that support is provided throughout the length of the pipe barrel.

d. Coarse Granular Bedding: Coarse Granular Bedding material shall consist of crushed stone or pea gravel, clean and graded, 95 to 100 percent of which shall pass a 3/4 inch sieve with 95 to 100 percent retained on a No. 4 sieve. Bedding material shall be placed on a flat bottom trench and thoroughly compacted by tamping or slicing with a flat blade shovel. Compacted bedding material shall be extended up the sides of the pipe to the heights shown for the various classes of bedding.

e. Over width Excavation: If trenches are excavated to widths in excess of those specified below, or if trench walls collapse, pipe shall be laid in accordance with the requirements for at least the next better class of bedding.

f. Borrow Backfill: Borrow backfill will be required if there is not sufficient suitable material available from other parts of the work to backfill the trenches. Borrow backfill from approved borrow pits shall be used. Only those soils in the borrow pits that meet the specified requirements for suitable material shall be used.

G. BEDDING OF PVC PIPE

a. Pipe shall be bedded true to line and grade with uniform and continuous support from a firm base in accordance with AWWA C605 as modified herein. Blocking shall not be used to bring the pipe to grade. Bedding material shall be included in

the unit price for plastic.

b. Compaction of foundation, bedding, haunching and initial backfill shall extend to the trench wall.

c. Embedment material in the area around the pipe shall be installed with care. Care shall be used to insure that sufficient material has been worked under the haunch of the pipe to provide adequate side support. Precautions must be taken to prevent movement of the pipe during placing of the material through the pipe haunch.

d. Avoid contact between the pipe and compaction equipment. Compaction of haunching, initial backfill and backfill material shall be done in such a way so that compaction equipment will not have a damaging effect on the pipe.

e. The trench depth shall be as shown on the plans or as required to provide the depth of cover as specified by the purchaser.

f. Embedment shall be of the type shown on approved plans or stated in the specifications for the utility system in which it is used. Type 1 embedment is not permitted without written approval of Town Staff.

H. BACKFILLING

a. Backfilling consists of placing suitable materials removed during the excavation into the excavated areas, placing embedment materials and compacting the same to a density equal to or greater than what exists before excavation or as specified herein.

b. All backfill material shall be free of stones, concrete and clay lumps larger than 1/3 cubic foot. Roots, stumps and rubbish which will decompose will not be permitted in the backfill. Backfill material shall have its moisture content corrected, as may be necessary before being placed in the trench to bring the moisture content to approximately "optimum" for good compaction. Any rock, stone, concrete, clay lumps larger than 1/3 cubic foot in volume, rubbish and debris shall be removed from the site and disposed of by the Contractor in a lawful manner.

c. Backfilling operations in this work are referred to herein as Backfilling at the Pipe Zone, Type "A" and Type "B".

d. Backfilling in the excavated areas below parts of proposed structures shall be referred to hereinafter as Type "A" Backfilling.

e. Where trenches cross or extend under structures or into present roadways, future roadways or parking areas as shown on the Plans, the backfilling shall be referred to hereinafter as Type "B" Backfilling.

f. Backfilling at the Pipe Zone: Throughout the entire construction, backfilling at the

pipe zone shall include bedding and shall be as follows: Backfill material shall be placed below, around each side, and over the top of the pipe, in approximately horizontal layers to a height of 12 inches over the top of the pipe. Layers shall be of such thickness to facilitate the required compaction. This backfill shall be well compacted by using mechanical tamping equipment in such manner as not to damage the pipe, pipe joints or shift the pipe alignment. Workmen shall not be permitted to walk over the pipe until at least 12 inches of compacted fill has been placed over the pipe. The Contractor shall not use water to obtain compaction except for adding water to the backfill material before placing in the trench to bring the moisture content to approximately "optimum" for good compaction.

g. Type "A" Backfilling: Type "A" backfilling consists of placing sand and gravel or other suitable materials excavated from the trench in the trench in 6 inch thick layers from a point 12 inches above the top of the pipe and mechanically tamped or compacted by rolling until the backfill density after compaction is equal to 98 percent of the maximum density obtainable at optimum moisture content as determined by the Standard proctor Test (ASTM D698). No water shall be used to secure compaction except for adding water to the backfill material before placing in the trench to bring moisture content approximately "optimum" for good compaction. Each 6 inch thick layer shall be mechanically tamped before additional backfill material is placed in the excavated area.

h. Type "B" Backfilling: Type "B" Backfilling consists of placing sand and gravel or other suitable material excavated from the trench in the trench in 12 inch thick compacted layers from a point 12 inches above the top of the pipe. Each 12 inch thick layer shall be compacted before additional backfill material placed in the excavation. Only mechanical tamping, use of roller or small tractor will be allowed. the density of the backfilled material after compaction shall be equal to 95 percent of the maximum density obtainable at optimum moisture content as determined by the Standard Proctor Test (ASTM D698). Except in the upper 12 inches, water shall be added to backfill material only before being placed in the trench in order to bring the moisture content to approximately "optimum" for good compaction.

I. PROTECTION OF WATER SUPPLY PIPES

a. Horizontal Separation: Sewers and force mains shall be laid at least 10 feet horizontally from any existing or proposed water-main. The distance shall be measured edge to edge. In cases where it is not practical to maintain a 10 foot separation, such deviation may allow installation of the sewer or force main closer to the water-main, provided that the water-main is in a separate trench or on a undisturbed earth shelf located on the side of the sewer or force main and at an elevation so the bottom of the water-main is at least 18 inches above the top of the sewer or force main. All proposed mains shall be placed as ductile iron pipe should separation requirements not be met.

b. Crossings: Sewers and force mains crossing water mains shall be laid to provide a

minimum vertical distance of 18 inches between the outside of the water-main an the outside of the sewer or force main. This shall be the case where the water-main is either above or below the sewer or force main. The crossing shall be arranged so that the sewer or force main joints will be equidistant and as far as possible from the water-main joints. Where a water-main crosses under a sewer or force main, adequate structural support shall be provided for the sewer or force main to prevent damage to the water-main. Should both lines be proposed, each shall be placed as ductile iron pipe.

c. Special Conditions: When it is impossible to obtain proper horizontal and vertical separation as stipulated above, the sewer or force main shall be designed and constructed equal to water pipe, be placed in ductile iron pipe, and shall be pressure tested to assure water tightness prior to backfilling.

J. UTILITY CONSTRUCTION IN OTHER EXCAVATION

a. Where utilities are required to be constructed in areas also requiring excavation and backfill for other work, coordinate the work so that the parts come together properly and the construction of the various parts can be done without damage to other parts. Place bedding which will form bearing for pipes, using suitable material and shaping to the lower 1/3 of the pipe to provide uniform and continuous bearing. Compaction of backfill material which will form bearing shall be equal to that specified hereinbefore under Type "A" Backfilling. After the pipe or other utility is placed, backfilling shall proceed as specified hereinbefore following the requirements specified under "Backfilling at the Pipe Zone," "Type 'A' Backfilling", and "Type 'B' Backfilling" as applicable.

K. TESTING

a. General: The Contractor shall select a qualified independent testing laboratory for the purpose of identifying soils, checking densities, and classifying soils materials during construction. Copies of all test results shall be furnished to Town Staff in duplicate.

b. Moisture-Density Tests: Testing shall be in accordance with ASTM Methods D698 and D1557. A test shall be performed on each type of material used in the work regardless of source. Tests will be accompanied by particle-size analyses of the soils tested (ASTM Methods D421 and D422). Changes in color, gradation, plasticity or source of fill material will require the performance of additional tests. Copies of all test results shall be furnished to Town Staff.

c. Field Density Tests: Tests shall be made in accordance with ASTM Method D1556. Tests shall be made in accordance with the following minimum schedule or as required by the soils technician or as may be directed by Town Staff:

1. One test for each lift of backfill for each 200 feet of trench or fraction

thereof.

d. Submittals

1. The soils technicians will submit formal reports of all compaction tests and retests. The reports are to be furnished to the Town Staff as soon as possible upon completion of the required tests.

2. This report information is to include but not be limited to the following:

a. Date of the test and date submitted.
b. Location of test.
c. Wet weight, moisture content and dry weight of field sample.
d. Description of soil.
e. Maximum dry density and moisture content of the lab sample which best matches the field sample in color, texture, grain size and maximum dry density.
f. Ratio of field dry density to maximum lab dry density expressed as a percentage.
g. Comments concerning the field density passing or failing the specified compaction.
h. Comments about re-compaction if required.

e. Compaction Results

1. If any compaction tests reveal that fill or backfill is not compacted as specified, the Contractor shall scarify and re-compact as required to achieve the specified density. Additional compaction tests shall be made to verify proper compaction.

2. The soils technician is to advise Town Staff and the Contractor's Superintendent immediately of any compaction tests failing to meet the specified minimum requirements. No additional left is to be placed on a lift with any portion failing.

L. CONSTRUCTION ALONG HIGHWAYS, STREETS AND ROADWAYS

a. Excavation, Trenching and Backfilling Operations: Excavation, trenching and backfilling along highways, streets and roadways shall be in accordance with the applicable regulations of the State Department of Transportation with reference to construction operations, safety, traffic control, road maintenance and repair.

b. Protection of Traffic: Provide suitable signs, barricades and lights for protection of traffic, in locations where traffic may be endangered by construction operations. All signs removed by reason of construction shall be replaced as soon as condition which necessitated such removal has been cleared. No highway, street or roadway

shall be closed without first obtaining permission from the proper authorities.

c. Construction Operations: The Contractor shall construct all work along highways, streets and roadways using the following sequence of construction operations, so as to least interfere with traffic:

1. Stripping: Where the pipe line is laid along road shoulders, sod, topsoil and other material suitable for shoulder restoration shall be stripped and stockpiled for replacement.

2. Trenching, Laying and Backfilling: Excavate trenches, install pipe line and backfill. The trench shall not be opened any further ahead of pipe laying operations than is necessary for proper laying operations. Trenches shall be progressively backfilled and consolidated and excess material removed immediately.

3. Shaping: Immediately after completing backfilling operation, reshape any damage to cut and fill slopes, side ditch lines, and shall replace top soil, sod and any other materials removed form shoulders.

d. Excavated Material: Excavated material shall not be placed along highways, streets, and roadways in such manner as to obstruct traffic. Roadways and pavement will be maintained free of earth material and debris.

e. Drainage Structures: All side ditches, culverts, cross drains and other drainage structures shall be kept clear of excavated material and be free to drain at all times.

f. Maintaining Highways, Streets, Roadways and Driveways

1. The Contractor shall furnish a road grader which shall be available for use at all times for maintaining highways, streets and roadways. All such streets, highways and roadways shall be maintained in suitable condition until completion and final acceptance of the work.

2. Repair all driveways that are cut or damaged. Maintain them in suitable condition until completion and final acceptance of the work.

M. REMOVING AND RESETTING FENCES

a. Where existing fences must be removed to permit construction, the Contractor shall remove such fences. As construction progresses, reset the fences in their original location and to their original condition.

N. PROTECTING TREES, SHRUBBERY AND LAWNS

a. Trees and shrubbery along trench lines shall not be disturbed unless absolutely

necessary. Trees and shrubbery necessary to be removed shall be properly heeled-in and re-planted. Heeling-in and re-planting shall be done under the direction of an experienced nurseryman.

b. Where utility trenches cross established lawns, sod shall be cut, removed, stacked and maintained in suitable condition until replaced. Topsoil underlying lawn areas shall likewise be removed and kept separate from general excavated materials. Removal and replacement of sod shall be done under the direction of an experienced nurseryman.

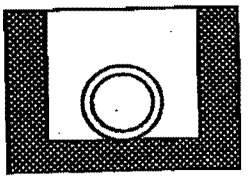

Type 1
Flat-bottom trench.* Loose embedment.
$E' = 50$ psi (340 kPa), $K = 0.110$

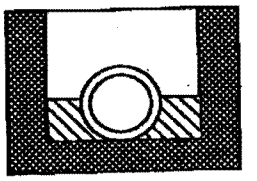

Type 2
Flat-bottom trench.* Embedment lightly consolidated to centerline of pipe.
$E' = 200$ psi (1,380 kPa), $K = 0.110$

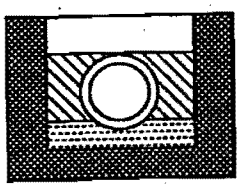

Type 3
Pipe bedded on 4 in. (100 mm) minimum of loose soil.† Embedment lightly consolidated to top of pipe.
$E' = 400$ psi (2,760 kPa), $K = 0.102$

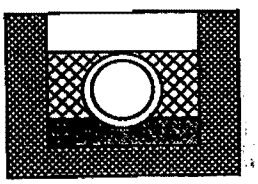

Type 4
Pipe bedded on sand, gravel, or crushed stone to depth of ⅛ pipe diameter, 4 in. (100 mm) minimum. Embedment compacted to top of pipe. (Approximately 80 percent Standard Proctor, AASHTO T-99 or ASTM D 698.)
$E' = 1,000$ psi (6,900 kPa), $K = 0.096$

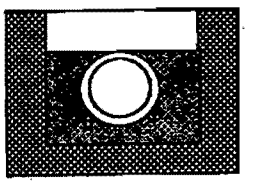

Type 5
Pipe embedded in compacted granular material to centerline of pipe. Compacted granular or select material† to top of pipe. (Approximately 90 percent Standard Proctor, AASHTO T-99 or ASTM D 698.)
$E' = 2,000$ psi (13,800 kPa), $K = 0.083$

NOTE: Required embedment type will depend on the pipe's dimension ratio, internal operating pressure, and external load, and shall be specified by the purchaser. (See Sec. 5.3)

*"Flat-bottom" is defined as undisturbed earth.
†"Loose soil" or "select material" is defined as native soil excavated from the trench, free of rocks, foreign materials, and frozen earth. A soft "loose soil" bedding will contour to the pipe bottom. Caution must be exercised to ensure proper placement of embedment material under the haunches of the pipe.

Figure 1 Typical embedment types

Copyright (C) 1998 American Water Works Association, All Rights Reserved.

END OF SECTION

JACK AND BORE CROSSINGS

PART 1. GENERAL

A. REGULATORY REQUIREMENTS

a. General: Supply all materials and perform all work in accordance with applicable American Society of Testing Materials (ASTM), American Water Works Association (AWWA), American National Standards Institute (ANSI) or other recognized standards. Latest revisions of all standards are applicable. If requested by Town Staff, submit evidence that manufacturer has consistently produced products of satisfactory quality and performance over a period of at least 2 years.

B. SUBMITTALS

a. Submit shop drawings, product data, and experience.

b. Material Submittals: The Contractor shall provide shop drawings and other pertinent specifications and product data as follows:

1. Shop drawings for casing pipe showing sizes and connection details.
2. Casing Spacers.

c. Experience Submittals: Boring and jacking casing is deemed to be specialty contractor work. If the Contractor elects to perform the work, the Contractor shall provide evidence as required by Town Staff. A minimum of five continuous years of experience in steel casing construction is required of the casing installer. Evidence of this experience must be provided with the shop drawings for review by Town Staff.

C. DELIVERY, STORAGE AND HANDLING

a. Material shall be unloaded in a manner that will avoid damage and shall be stored where it will be protected and will not be hazardous to traffic. The Contractor shall repair any damage caused by the storage. Material shall be examined before installation and neither damaged nor deteriorated material shall be used in the work.

PART 2. PRODUCTS

A. MATERIALS AND CONSTRUCTION

a. The casing pipe shall be new and unused steel pipe, conforming to ASTM A-139, Grade B, electric fusion welded steel pipe, having a minimum yield strength of 35,000 psi. The exterior and interior of the steel casing pipe shall be coated with a

coal tar varnish.

b. The thickness of casing shown in paragraph c below are minimum thicknesses. Actual thicknesses shall be determined by the casing installer, based on evaluation of the required forces to be exerted on the casing when jacking. Any buckling of the casing due to jacking forces shall be repaired.

c. The diameters of casing shown below are minimum. Larger casings, with the Town Staff approval, may be provided, for whatever reasons the Contractor may decide, whether casing size availability, line and grade tolerances, soil conditions, etc.

UNDER HIGHWAYS

PVC (Water or Force Main) Pipe Dia. In.	Casing Pipe In.	Wall Thickness In.
8	16"	0.250
10	16"	0.250
12	18"	0.250
16	24"	0.250

d. Casing Spacers: Casing spacers shall meet one of the following requirements:

1. Casing spacers shall be flanges, bolt-on style with a two-section stainless steel shell lined with a PVC liner, minimum 0.09-inch thick also having a hardness of 85-90 durometer. Runners shall be attached to stainless steel risers which shall be properly welded to the shell. The height of the runners and risers shall be manufactured such that the pipe does not float within the casing. Casing spacers shall be Cascade waterworks Manufacturing Company or Advanced Products & Systems, Inc., or equivalent product approved by Town Staff.

2. Casing spacers shall be a two-section, flanged bolted on style constructed of heat fused PVC coated steel, minimum 14 gauge band and 10 gauge risers, with 2-inch wide glass reinforced polyester insulating skids, heavy duty PVC inner liner, minimum 0.09-inch thick having a hardness of 85-90 durometer, and all stainless steel or cadmium plated hardware shall be Pipeline Seal and Insulator, Inc., or equivalent as approved by Town Staff.

e. Carrier Pipe: Carrier pipe shall meet requirements as specified in these Specifications.

B. EQUIPMENT

a. A cutting head shall be attached to a continuous auger mounted inside the casing

pipe.

PART 3. EXECUTION

A. GENERAL

a. Interpretation of soil investigation reports and data, investigating the site and determination of the site soil conditions prior to construction is the sole responsibility of the Contractor. Any subsurface investigation Contractor must be approved by the appropriate authority having jurisdiction over the site.

b. Casing construction shall be performed so as not to interfere with, interrupt or endanger roadway surface and activity thereon, and minimize subsidence of the surface, structures, and utilities above and in the vicinity of the casing. Support the ground continuously in a manner that will prevent loss of ground and keep the perimeters and face of the casing, passages and shafts stable. The Contractor shall be responsible for all settlement resulting from casing operations and shall repair and restore damaged property to its original or better condition.

c. Face Protection: The face of the excavation shall be protected from the collapse of the soil into the casing.

d. Casing Design: Design of the bore pit and required bearing to resist jacking forces is the responsibility of the Contractor. The excavation method selected shall be compatible with expected ground conditions. The lengths of the casing shown on the approved drawings are the minimum lengths required. The length of the casing may be extended for the convenience of the Contractor. Due to restrictive right-of-way and construction easements, boring and jacking casing lengths less than the nominal 20-foot length may be necessary.

e. Highway Crossing:

1. The Contractor shall be held responsible and accountable for the coordinating and scheduling of all construction work within the highway rights-of-way.

2. Work along or across the highway department rights-of-way shall be subject to inspection by such highway department.

3. All installations shall be performed to leave free flows in drainage ditches, pipes, culverts or other surface drainage facilities of the highway, street or its connections.

4. No excavated material or equipment shall be placed on the pavement or shoulders of the roadway without the express approval of the highway department.

5. In no instance will the Contractor be permitted to leave equipment (trucks, backhoes, etc.) on the pavement or shoulder overnight. Construction materials to be installed, which are placed on the right-of-way in advance of construction, shall be placed in such a manner a not to interfere with the safe operation of the roadway.

B. GROUNDWATER CONTROL

a. The Contractor shall control the groundwater throughout the construction of the casing.

b. Methods of dewatering shall be at the option and responsibility of the Contractor. Maintain close observation to detect settlement or displacement of surface facilities due to dewatering. Should settlement or displacement be detected, notify Town Staff immediately and take such action as necessary to maintain safe conditions and prevent damage.

c. When water is encountered, provide and maintain a dewatering system of sufficient capacity to remove water on a 24-hour basis keeping excavations free of water until the backfill operation is in progress. Dewatering shall be performed in such a manner that removal of soil particles is held to a minimum. Dewater into a sediment trap and comply with requirements specified by applicable agencies, SCDHEC, and OCRM.

C. SAFETY

a. Provide all necessary bracing, bulkheads, and shields to ensure complete safety to all traffic persons and property at all times during the work. Perform the work in such a manner as to not permanently damage the roadbed or interfere with normal traffic over it. If in the opinion of Town Staff the installation is being conducted in an unsafe manner, the Contractor will be required to stop work and bulkhead the heading until suitable agreements are reached between the Contractor and Town Staff.

b. Observe all applicable requirements of the regulations of the authorities having jurisdiction over this site. Conduct the operations in such a manner that all work will be performed below the level of the roadbed.

c. Perform all activities in accordance with the Occupational Safety and Health Act of 1970 (PL-596), as amended, applicable regulations of the Federal Government,

OSHA 29CFR 1926 and applicable criteria of ANSI AIO.16-81, "Safety Requirements for Construction of Tunnel Shafts and Caissons".

D. BORING AND JACKING

a. Shaft:

1. Conduct boring and jacking operations from a shaft excavated at one end of the section to be bored. Where conditions and accessibility are suitable, place the shaft on the downstream end of the bore.

2. The shaft shall be rectangular and excavated to a width and length required for ample working space. If necessary, sheet and shore shaft properly on all sides. Shaft sheeting shall be timber or steel piling of ample strength to safely withstand all structural loadings of whatever nature due to site and soil conditions. Keep preparations dry during all operations. Perform pumping operations as necessary.

3. The bottom of the shaft shall be firm and unyielding to form an adequate foundation upon which to work. In the event the shaft bottom is not stable, excavate to such additional depth as required and place a gravel sub-base or a concrete sub-base if directed by Town Staff due to soil conditions.

b. Jacking Rails and Frame

1. Set jacking rails to proper line and grade within the shaft. Secure rails in place to prevent settlement or movement during operations. The jacking rails shall cradle and hold the casing pipe on true line and grade during the progress of installing the casing.

2. Place backing between the heels of jacking rails and the rear of the shaft. The backing shall be adequate to withstand 0 jacking forces and loads.

3. The jacking frame shall be of adequate design for the magnitude of the job. Apply thrust to the end of the pipe in such a manner to impart a uniformly balanced load to the pipe barrel without damaging the joint ends of the pipe.

c. Boring and jacking of casing pipes shall be accomplished by the dry auger boring method without jetting, sluicing or wetboring.

d. Auger the hole and jack the casing through the soil simultaneously.

e. Bored installations shall have a bored-hole diameter essentially the same as the outside diameter of the casing pipe to be installed.

f. Execute boring ahead of the casing pipe with extreme care, commensurate with the rate of casing piping penetration. Boring may proceed slightly in advance of the penetrating pipe and shall be made in such a manner to prevent any voids in the earth around the outside perimeter of the pipe. Make all investigations and determine if the soil conditions are such as to require the use of a shield.

g. As the casing is installed, check the horizontal and vertical alignment frequently. Make corrections prior to continuing operation. For casing pipe installations over 100 feet in length, the auger shall be removed and the alignment and grade checked at minimum intervals of 60 feet.

h. Any casing pipe damaged in jacking operations shall be repaired, if approved by Town Staff, or removed and replaced at Contractor's own expense.

i. Lengths of casing pipe, as long as practical, shall be used except as restricted otherwise. Joints between casing pipe sections shall be butt joints with complete joint penetration, single groove welds, for the entire joint circumference, in accordance with AWS recommended procedures. Prior to welding the joints, the Contractor shall ensure that both ends of the casing sections being welded are square.

j. The Contractor shall prepare a contingency plan which will allow the use of a casing lubricant, such as bentonite, in the event excessive frictional forces jeopardize the successful completion of the casing installation.

k. Once the jacking procedure has begun, it should be continued without stopping until completed, subject to weather and conditions beyond the control of the Contractor.

l. Care should be taken to ensure that casing pipe installed by boring and jacking method will be at the proper alignment and grade.

m. The Contractor shall maintain and operate pumps and other necessary drainage system equipment to keep work dewatered at all times.

n. Adequate sheeting, shoring and bracing for embankments, operating pits and other appurtenances shall be placed and maintained to ensure that work proceeds safely and expeditiously. Upon completion of the required work, the sheeting, shoring and bracing should be left in place, cut off, or removed, as designated by Town Staff.

o. All surplus material shall be removed from the right-of-way and the excavation finished flush with the surrounding ground.

p. Grout backfill shall be used for unused holes or abandoned pipes.

E. VENTILATION AND AIR QUALITY

a. Provide, operate and maintain for the duration of casing project a ventilation system to meet safety and OSHA requirements.

F. INSTALLATION OF PIPE

a. After construction of the casing is complete, and has been accepted by Town Staff, install the pipeline in accordance with the approved Drawings and Specifications.

b. Check the alignment and grade of the casing and prepare a plan to set the pipe at proper alignment, grade and elevation, without any sags or high spots.

c. The carrier pipe shall be held in the casing pipe by one of the following methods:

1. The carrier pipe shall be held in the casing pipe by the use of hardwood blocks spaced radially around the pipe and secured together so that they remain firmly in place. The spacing of such blocks longitudinally in the casing pipe shall not be greater than 10 feet.

2. The pipe shall be supported within the casing by use of casing spacers sized to limit radial movement to a maximum of 1 inch. Provide a minimum of one casing spacer per nominal length of pipe. Casing spacers shall be attached to the pipe at maximum 18 to 20 foot intervals.

d. Close the ends of the casing with seal ends with one piece synthetic rubber especially formulated for sealing casing/carrier pipe.

G. SHEETING REMOVAL

a. Remove sheeting used for shoring from the shaft and off the job site. The removal of sheeting, shoring, and bracing shall be done in such a manner as not to endanger or damage either new or existing structures, private or public properties, and also to avoid cave-ins or sliding in the banks.

SAND OIL GREASE SEPARATOR

PART 1 DESIGN GUIDELINES

A. GENERAL

a. The following design guidelines are based on Federal, State, and local health requirements and the Town of Ridgeland's engineering design criteria.
b. All installations are to meet the standards of the South Carolina Department of Health and Environmental Control (SCDHEC).
c. These design guidelines are applicable to all commercial establishments requiring sewer service from the Town of Ridgeland.

B. DESIGN CRITERIA

a. Provide precast concrete vault
    i. 4000 psi concrete
    ii. 1500 gallons minimum size
b. Separator size shall be determined by:
    i. Volume of throughput
    ii. Solids retention capacity, in pounds, equal to twice the flow rate in gallons per minute
    iii. Retain 90% of all oil and grease
    iv. Retain 100% of all sand
    v. Detention time shall be based on peak flow to interceptor
c. Restaurants shall use the following design criteria
    i. Size of separator = D x GL x SC x (HR/2) x LF where:
        1. D = Number of Seats in Dining Area
        2. GL = Gallons of Wastewater per Meal, normally 5 gallons
        3. SC = Storage Capacity Factor, 1.7 minimum
        4. HR = Number of Hours Open
        5. LF = Loading Factor
            a. Recreational Areas = 1.0
            b. Main Highways = 0.8
            c. Other Highways = 0.5
d. Hospitals, nursing homes, and other commercial kitchens shall use the following design criteria
    i. Size of separator = M x GL x SC x 2.5 x LF where:
        1. M = Meals per Day
        2. GL = Gallons of Wastewater per Meal, normally 4.5 gallons

3. SC = Storage Capacity Factor, 1.7 minimum
4. LF = Loading Factor
    a. Garbage disposal and dishwasher = 1.25
    b. Without garbage disposal = 1.0
    c. Without dishwasher = 0.75
    d. Without dishwasher and garbage disposal = 0.5

e. Minimum gravity sewer line size shall be 4" diameter
f. Separator shall be located to provide easy access for cleaning and solids removal
    i. Solids shall be removed when approximately 75% of separators capacity is reached
g. Manhole Frames and Covers shall be USF681 or acceptable equivalent.

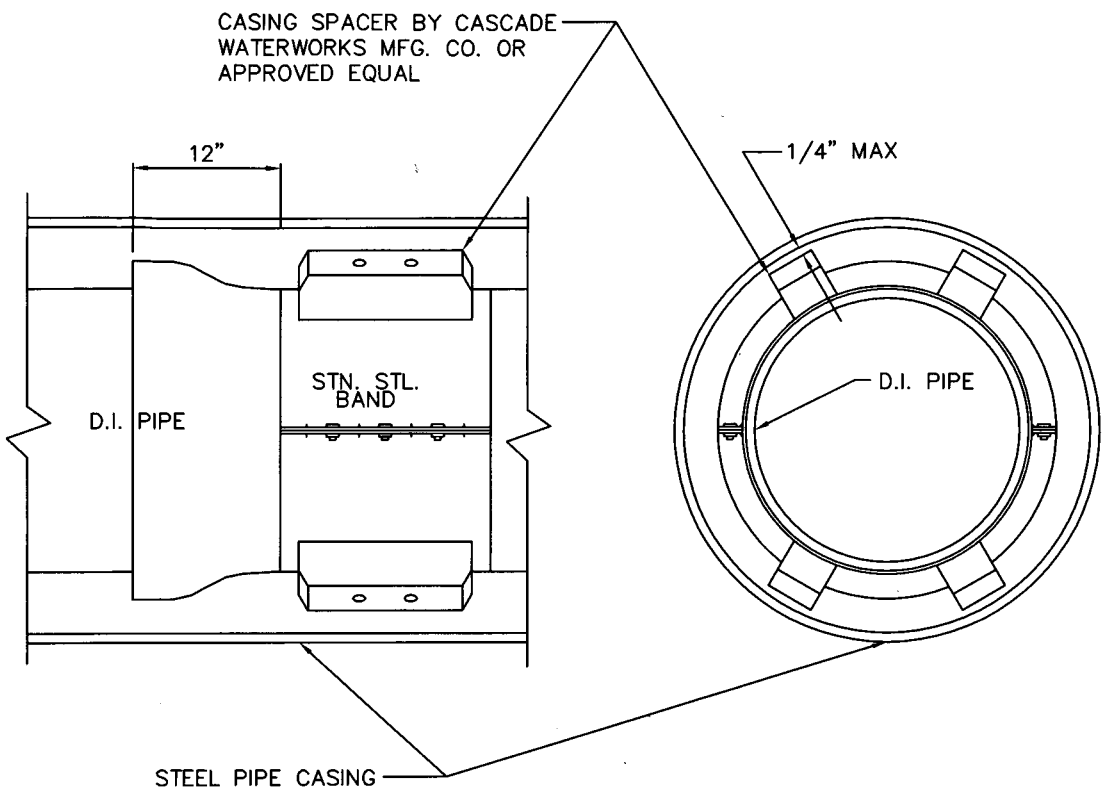

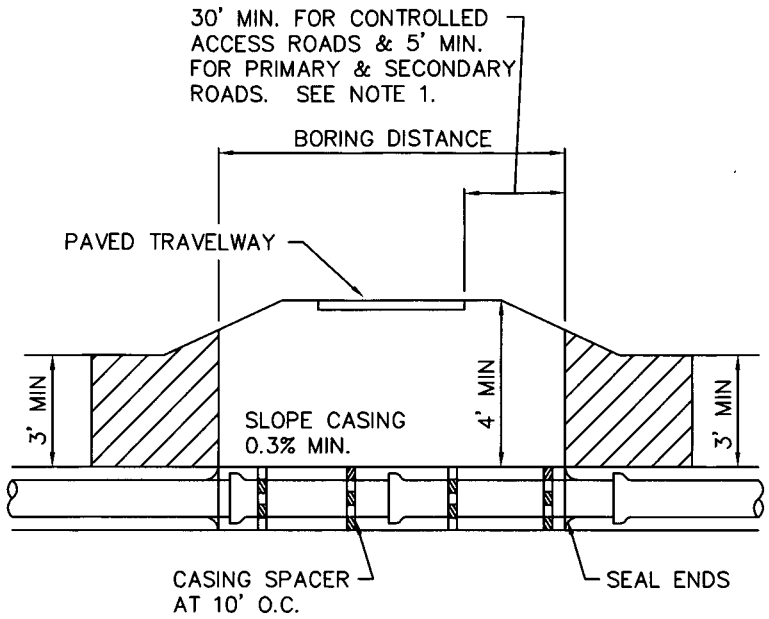

NOTES:

1. THE NEAR EDGE OF THE PIT CAN BE NO CLOSER TO THE EDGE OF THE TRAVELWAY THAN ITS DEPTH BELOW THE SURFACE OF THE TRAVELWAY UNLESS BULKHEADED.
2. ALL PIPE WITHIN & TO 5' FROM CASING TO BE DUCTILE IRON.

CARRIER PIPE INSTALLATION IN CASING

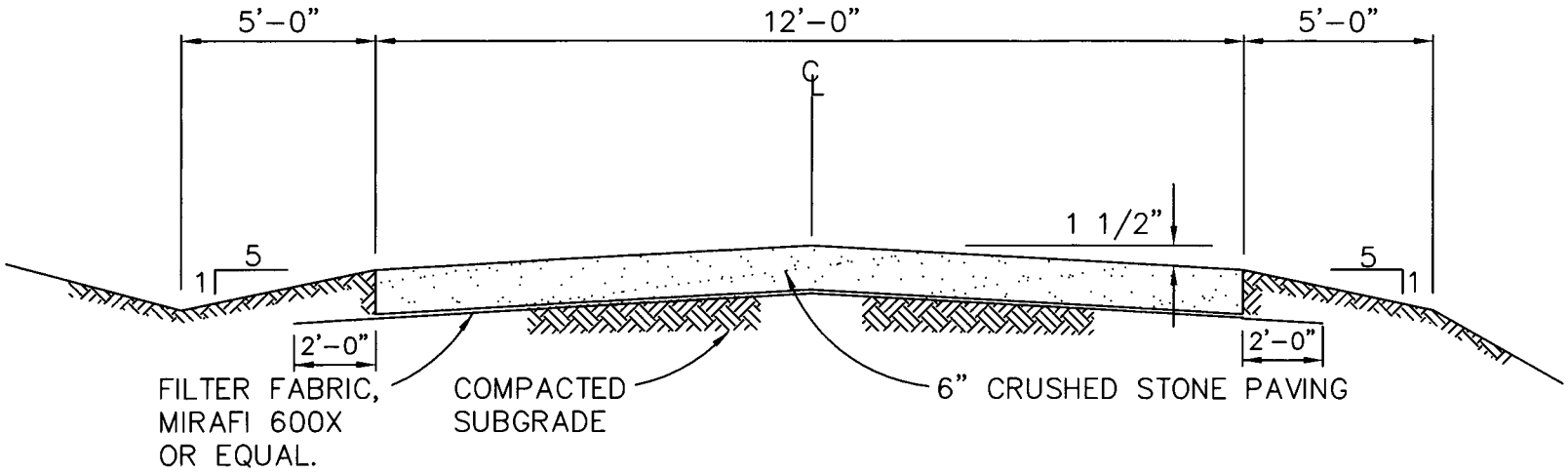

PUMP STATION ACCESS ROAD DETAIL

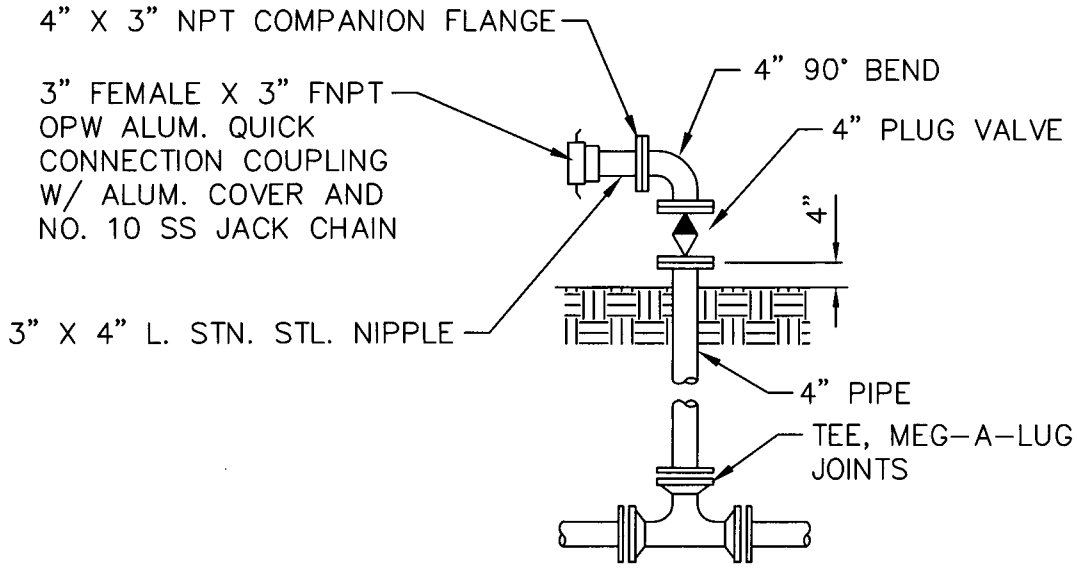

EMERGENCY PUMPING CONNECTION

NOT TO SCALE

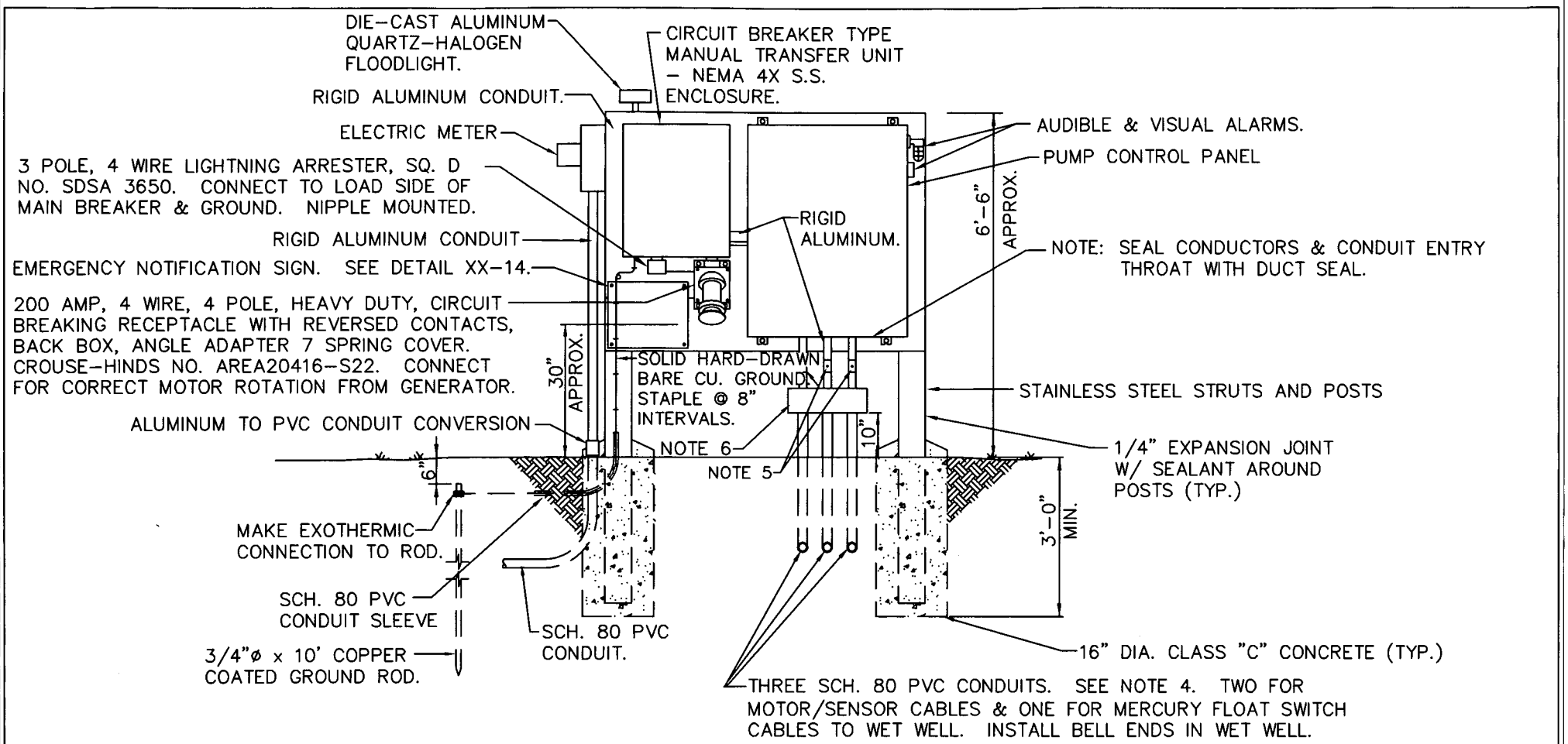

NOTES

1. ALL ABOVE GROUND CONDUIT, ELBOWS & COUPLINGS SHALL BE FULL WEIGHT RIGID ALUMINUM. PROVIDE SCH. 80 PVC CONDUIT UNDERGROUND AND WHERE NOTED. MINIMUM BURIAL DEPTH TO BE 24".
2. CIRCUIT BREAKER TRANSFER UNIT SHALL BE U.L. APPROVED FOR USE AS SERVICE ENTRANCE EQUIPMENT, WITH INSULATED GROUNDABLE NEUTRAL. BREAKERS SHALL BE G.E. OR SQUARE D.
3. ALL ATTACHMENT HARDWARE SHALL BE HOT DIPPED GALVANIZED.
4. EXACT ORIENTATION AND LOCATION OF ELECTRICAL SERVICE EQUIPMENT STRUCTURE SHALL BE DETERMINED IN FIELD BY THE DISTRICT, FOR BEST VIEW OF ALARM LIGHT & ACCESS TO ELECTRICAL EQUIPMENT.
5. PROVIDE TYPE EY TYPE CONDUIT SEAL-OFF. SEAL WITH SEALING COMPOUND. MAKE POWER, SENSOR & LEVEL CONTROL CONNECTIONS IN THE JUNCTION BOX.
6. 16"x12"x6" NEMA 4X S.S. JUNCTION BOX W/ GASKETED SCREW COVER.
7. PROVIDE SOIL STABILIZER FABRIC WITH 4" OF NO. 57 GRAVEL OVER, OUT TO 4' ON ALL SIDES OF STRUCTURE.

TYPICAL SUBMERSIBLE DUPLEX PUMP STATION (UP TO 15 HP MOTORS) ELECTRICAL SERVICE DETAIL

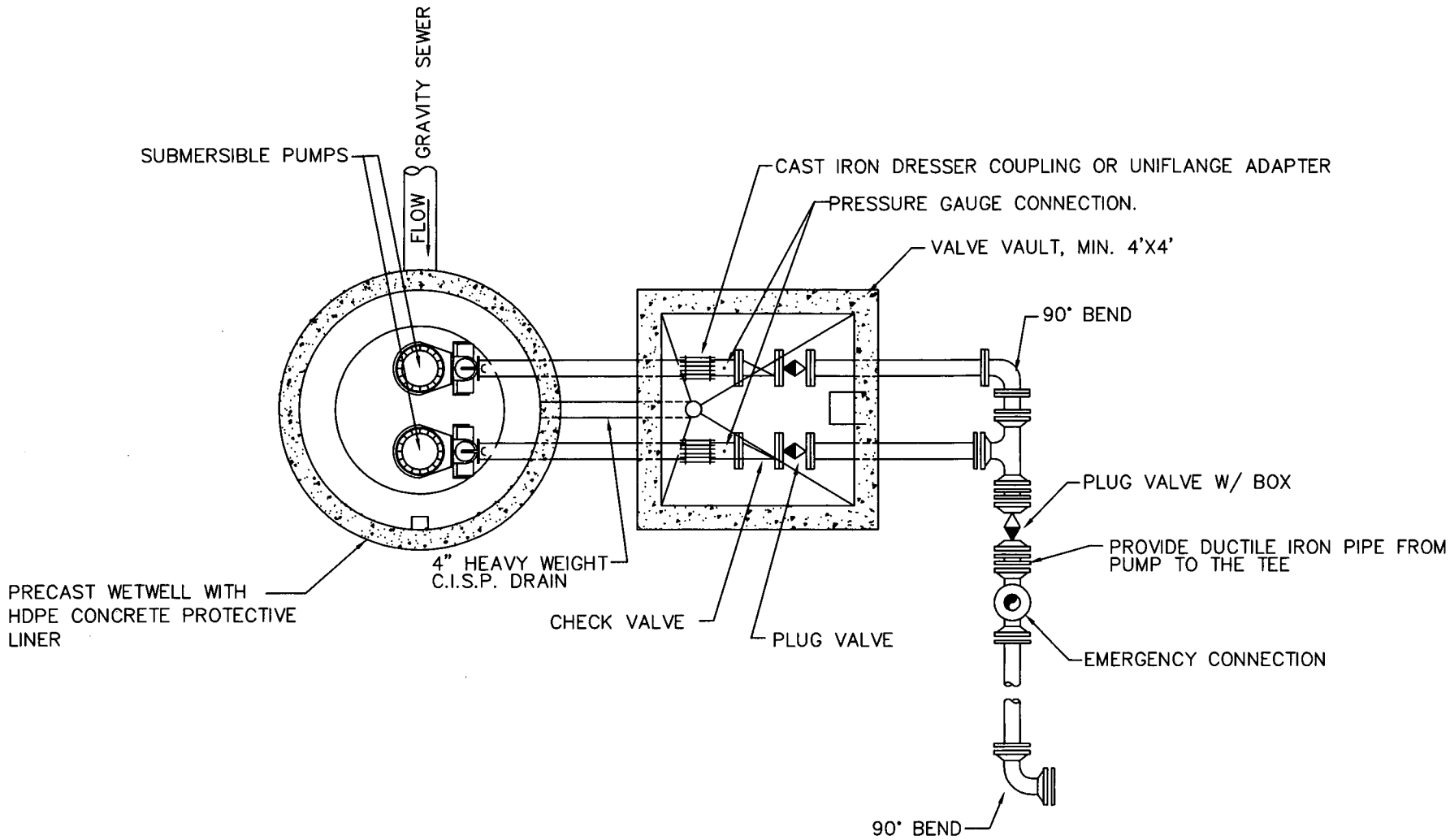

TYPICAL PLAN VIEW
SUBMERSIBLE PUMP STATION

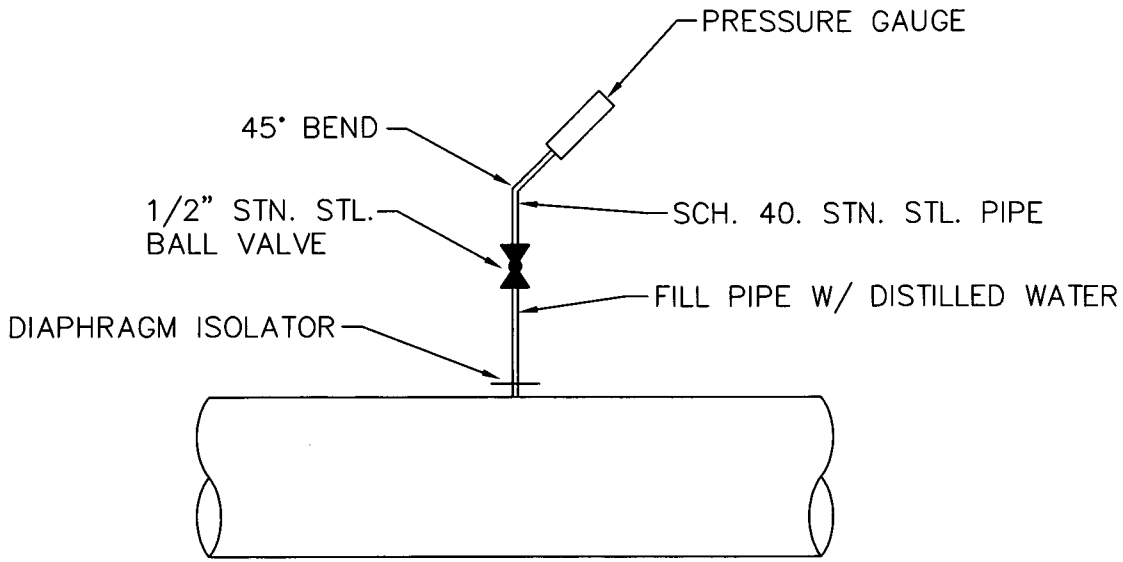

PRESSURE GAUGE CONNECTION DETAIL

NOT TO SCALE

PRESSURE GAUGE CONNECTION DETAIL

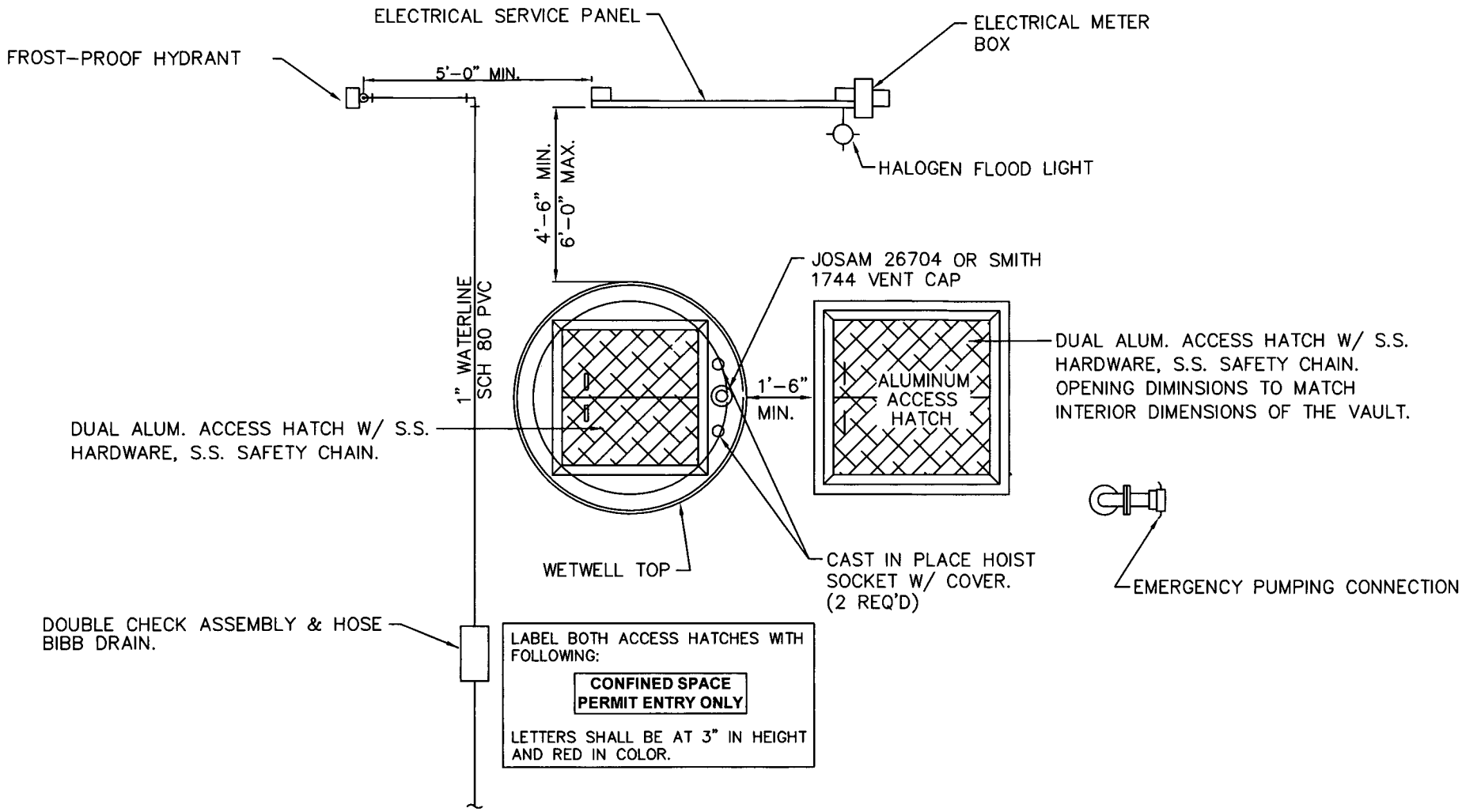

NOTE:

1. MOUNT FLOOD LIGHT ON POST OF THE CONTROL PANEL SUPPORT. LOCATE AT ADEQUATE HEIGHT TO LIGHT WETWELL AND VALVE VAULT AREA. PROVIDE WEATHERPROOF SWITCH.

SUBMERSIBLE PUMP STATION

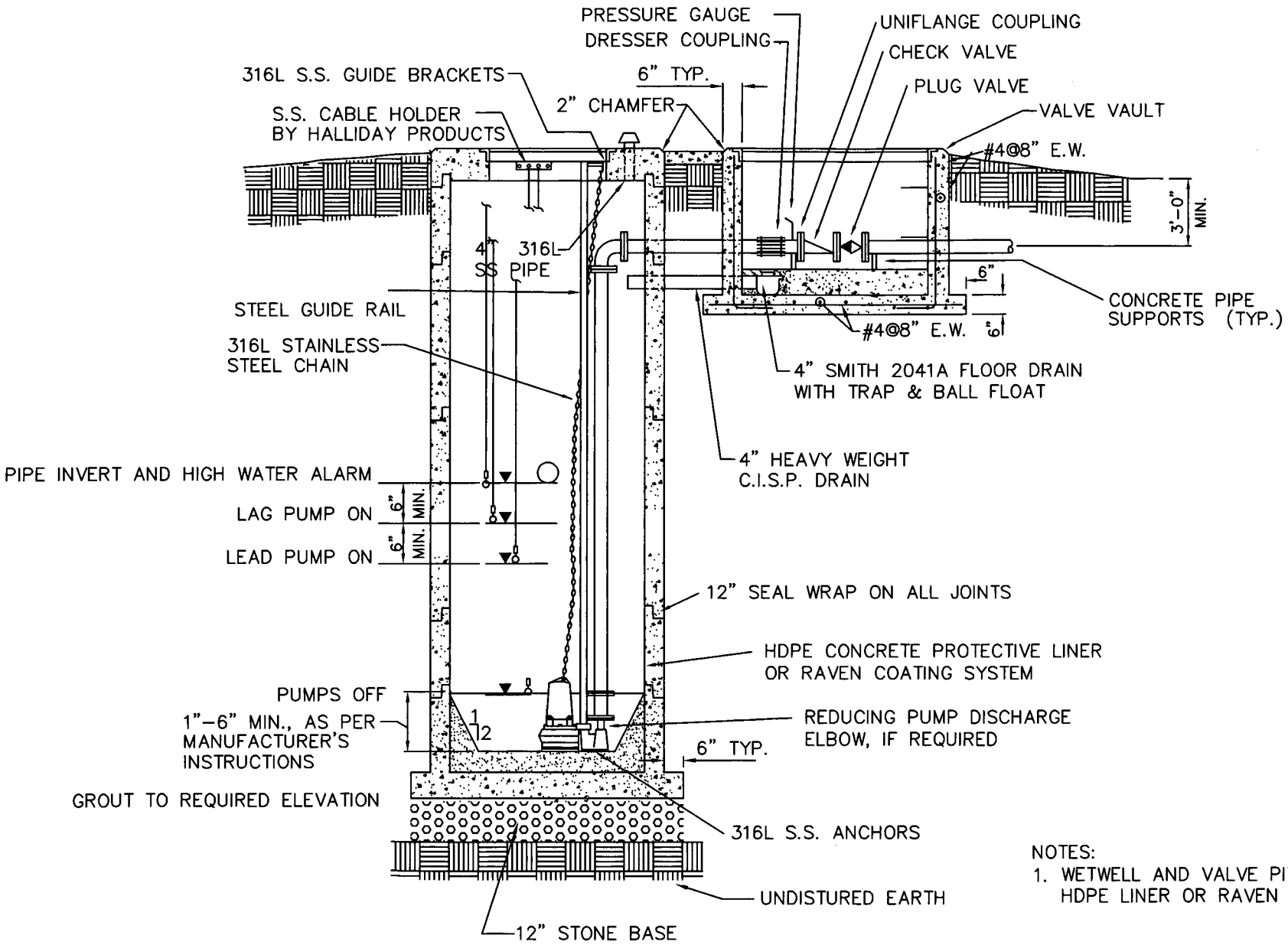

NOTES:

1. WETWELL AND VALVE PIT TO BE LINED WITH HDPE LINER OR RAVEN SYSTEM

TYPICAL SECTION
THROUGH SUBMERSIBLE PUMP STATION

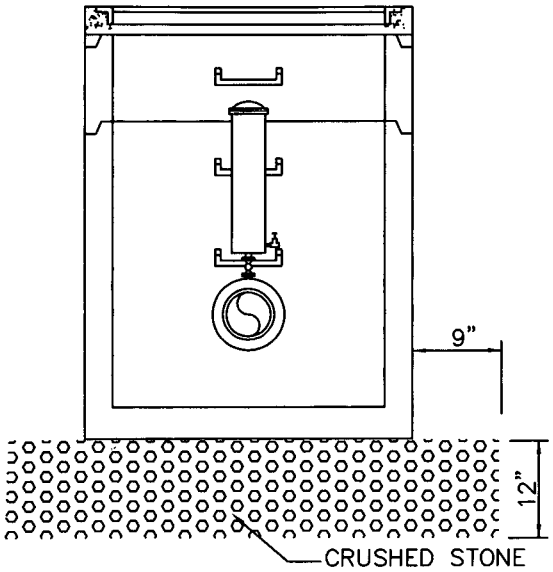

SECTION 2

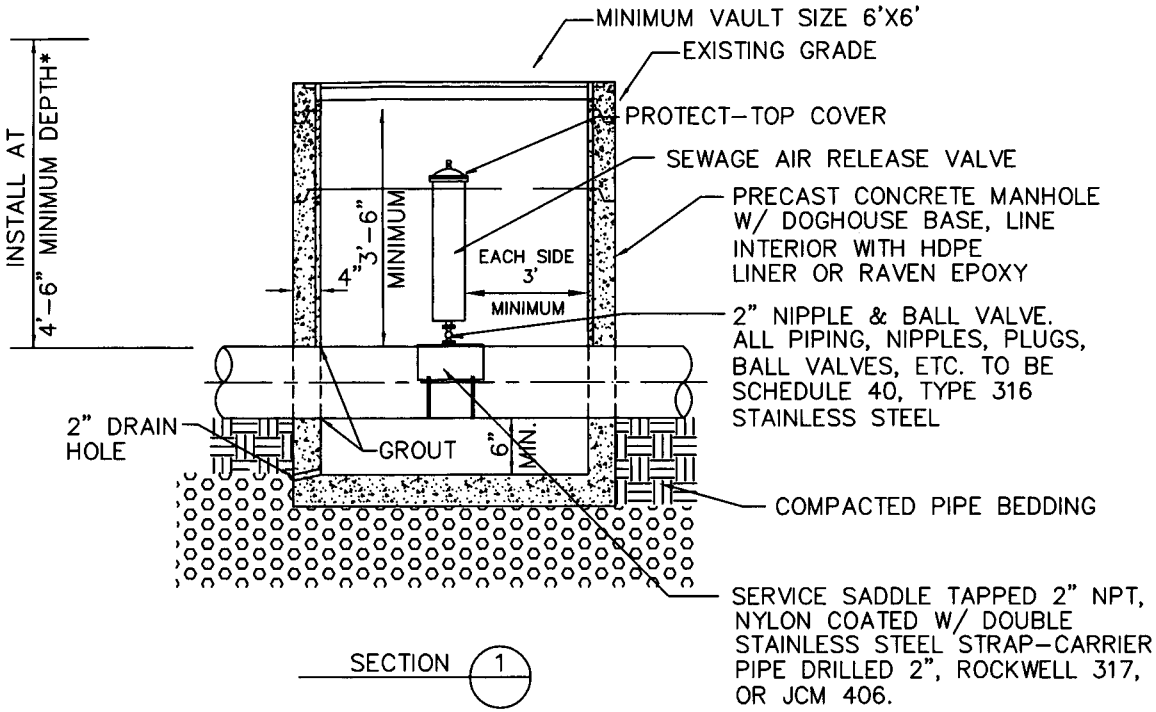

SECTION 1

AIR RELEASE VALVE VAULT

NOT TO SCALE

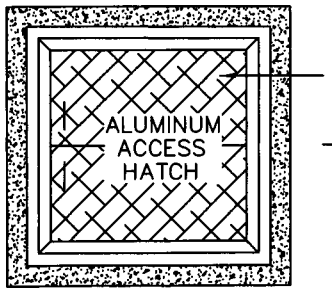

DUAL ALUM. ACCESS HATCH W/ S.S. HARDWARE, S.S. SAFETY CHAIN. OPENING DIMINSIONS 4'x4' MINIMUM

PLAN VIEW
NOT TO SCALE

AIR RELEASE VALVE VAULT

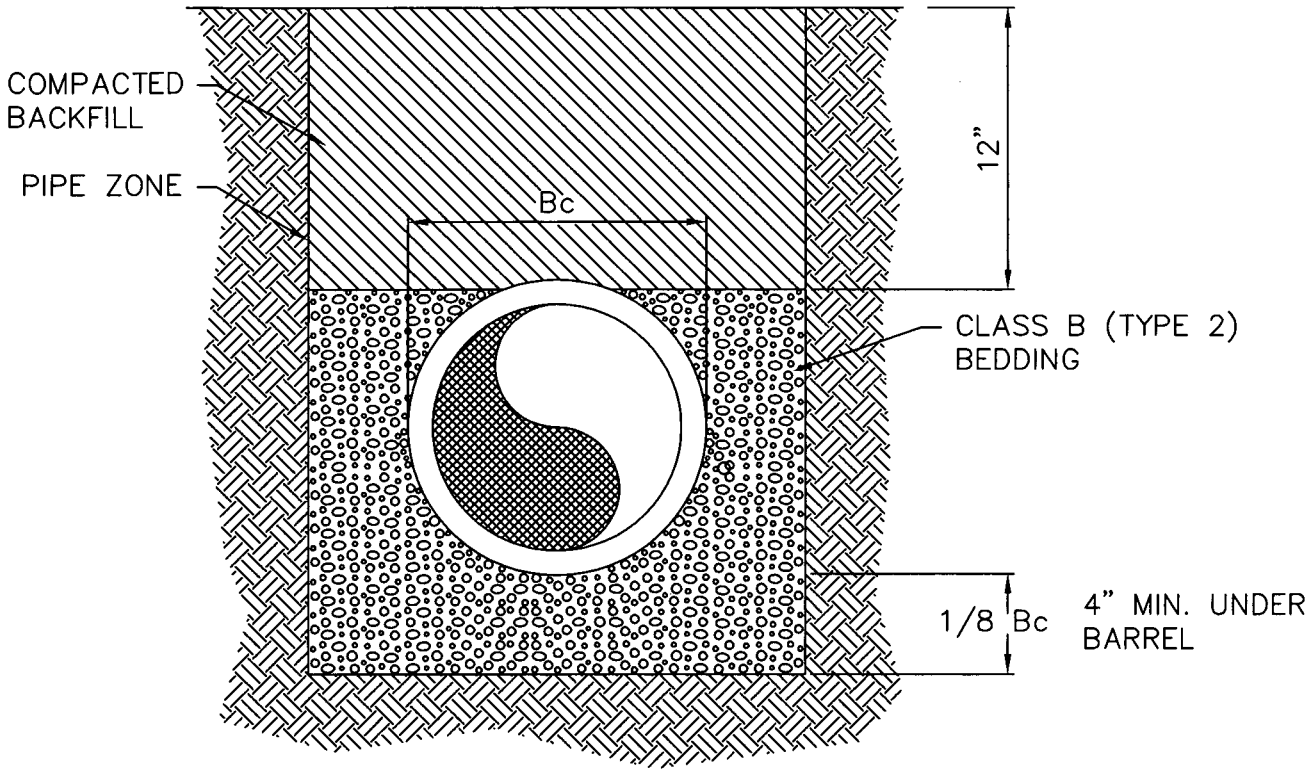

BEDDING FOR PVC GRAVITY SEWER PIPE

NOT TO SCALE

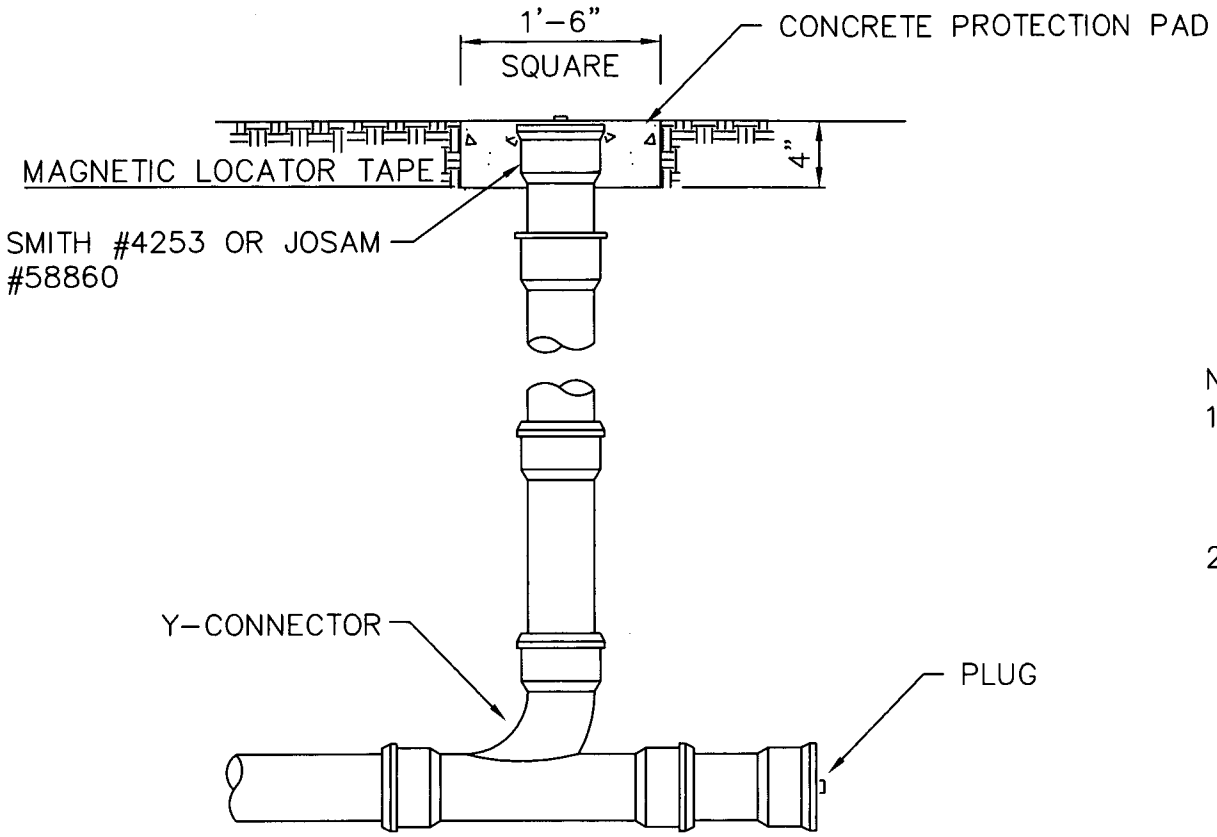

CLEANOUT DETAIL

NOT TO SCALE

NOTES:

1. THE CLEANOUT SHOULD BE THE SAME SIZE DIAMETER AS THE LINE THAT IT IS INSTALLED ON.

2. CLEANOUT SHOULD CONSIST OF A PLUG SUITABLE FOR AIR TEST.

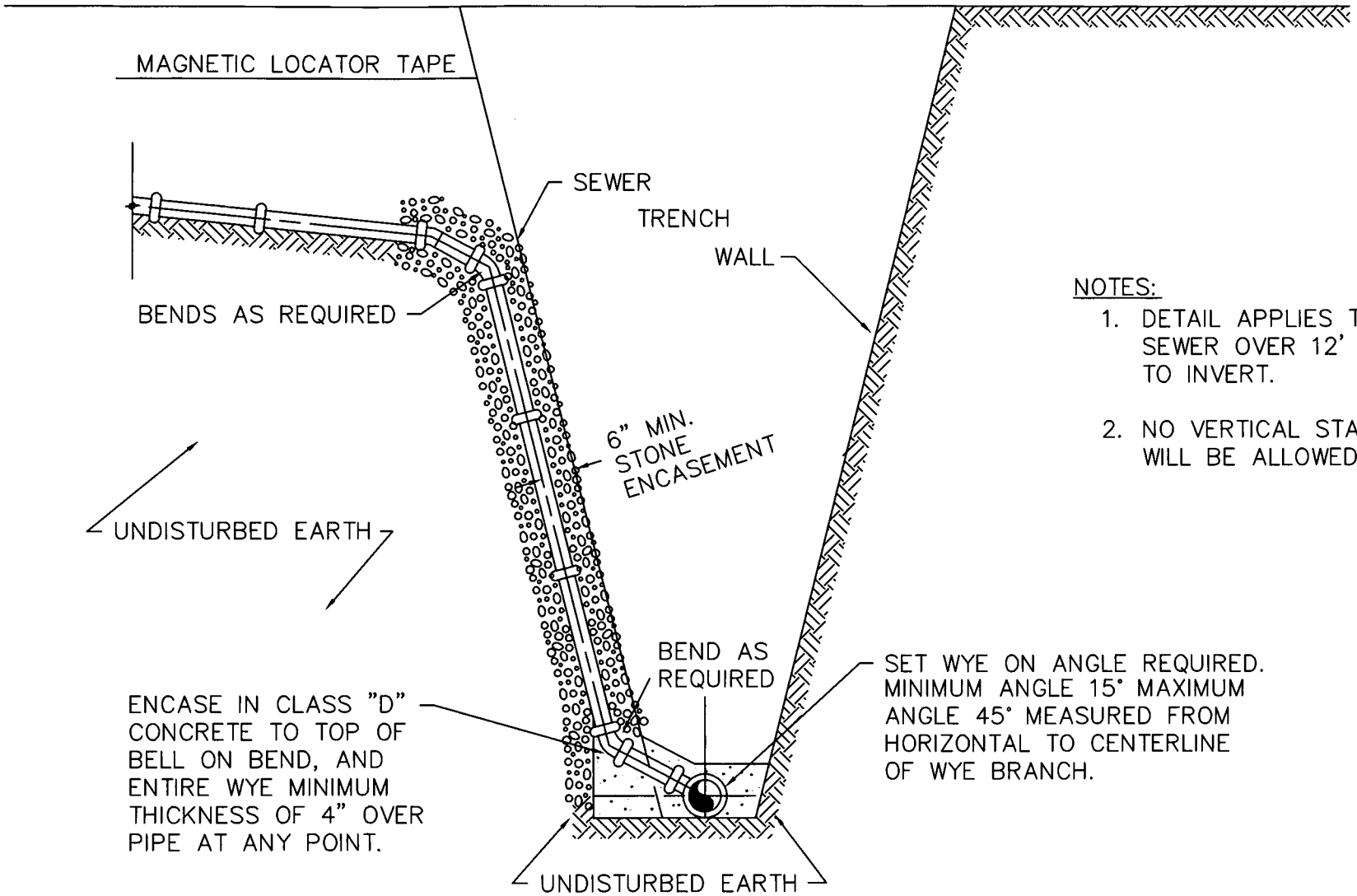

NOTES:

1. DETAIL APPLIES TO SEWER OVER 12' DEEP TO INVERT.
2. NO VERTICAL STACKING WILL BE ALLOWED

DEEP SEWER SERVICE DETAIL

NOT TO SCALE

DEEP SEWER SERVICE DETAIL

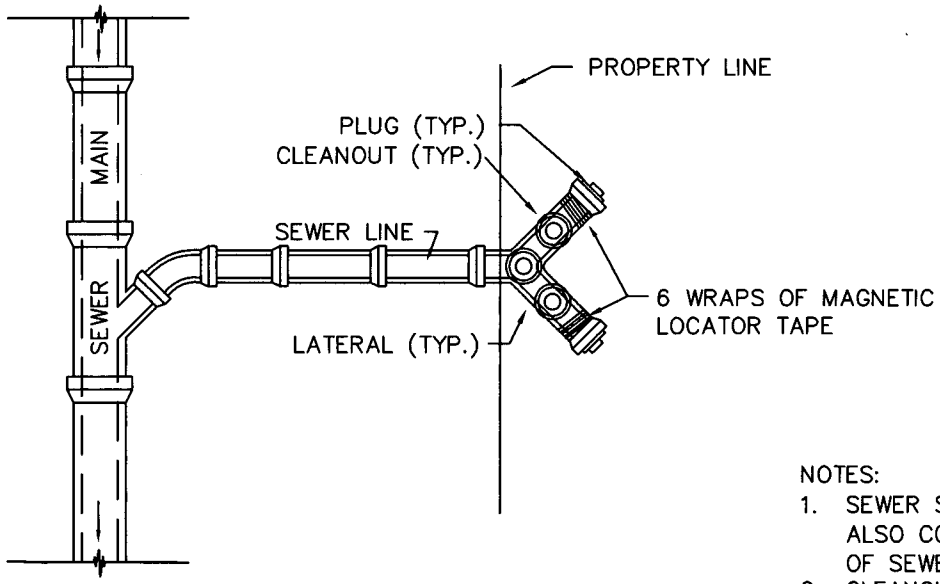

NOTES:

1. SEWER SERVICE CONNECTION SHOULD ALSO COMPLY WITH REQUIREMENTS OF SEWER SERVICE DETAIL.
2. CLEANOUTS ON INDIVIDUAL LATERALS SHALL BE PLACED AT PROPERTY LINE.
3. CONNECTION TO MAIN SHALL BE 6" PIPE. SERVICES MAY BE 4".

DOUBLE SEWER SERVICE

NOT TO SCALE

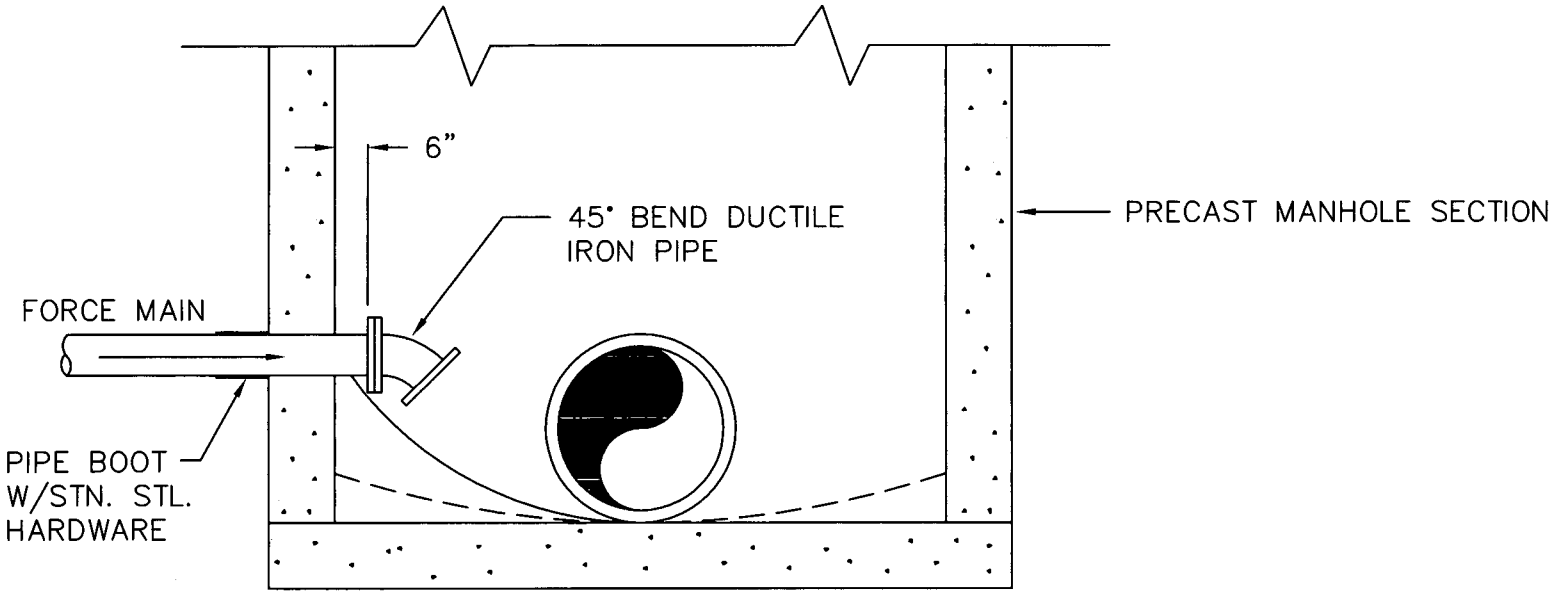

FORCE MAIN DISCHARGE DETAIL

NOT TO SCALE

NOTES:

1. LINE INTERIOR OF NEW PRECAST MANHOLES WITH HDPE CONCRETE PROTECTIVE LINER.
2. COAT INTERIOR OF EXISTING MANHOLES WITH RAVEN SYSTEM.

FORCE MAIN DISCHARGE DETAIL

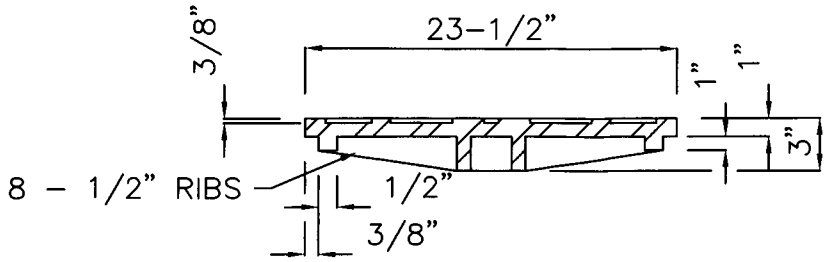

SECTION OF COVER

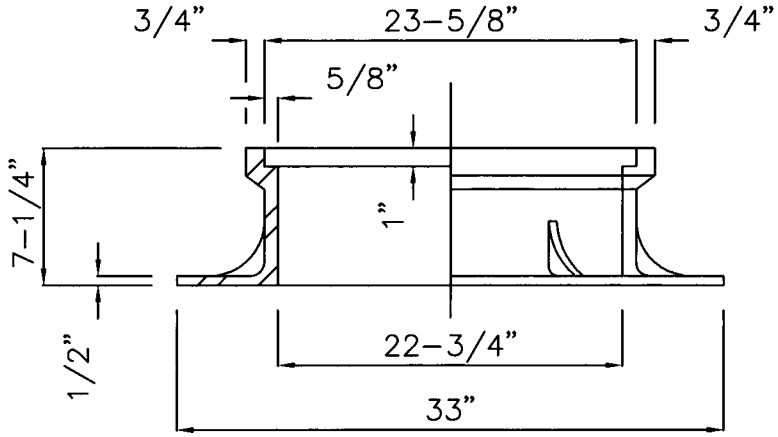

HALF SECTION FRAME

APPROX. WTS

FRAME-208#
COVER-120#
TOTAL-328#

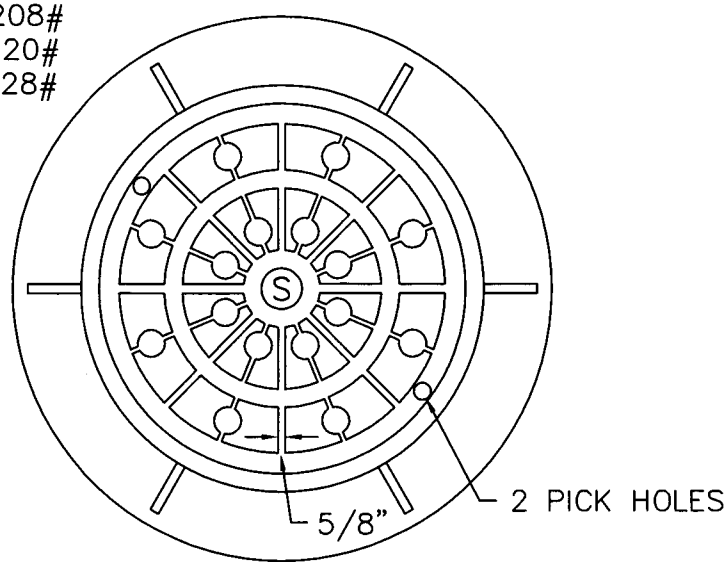

PLAN VIEW

HALF ELEVATION FRAME

NOTES:

1. AS MANUFACTURED U.S. FOUNDRY MODEL 680. PROVIDE WITH 2 COATS OF BITUMASTIC PAINT.

2. MACHINED BEARING SURFACES BETWEEN COVER AND FRAME.

STANDARD FRAME & COVER

NOT TO SCALE

STANDARD FRAME AND COVER

STANDARD MANHOLES SCHEDULE OF GOVERNING DIMENSIONS				
PIPE SIZE	ANGLE △	MANHOLE DIAMETER	"R"	"X"
8" TO 15"	0° TO 90°	4'-0"	2'-0"	0"
18" TO 30"	0° TO 90°	5'-0"	2'-0"	6"
36" TO 42"	0° TO 60°	6'-0"	3'-0"	9"
36" TO 42"	60° TO 90°	6'-0	3'-0"	1'-2"
48" OR LARGER	0° TO 45°	7'-0	4'-0"	6"
48" OR LARGER	45° TO 90°	8'-0	3'-0"	1'-3"

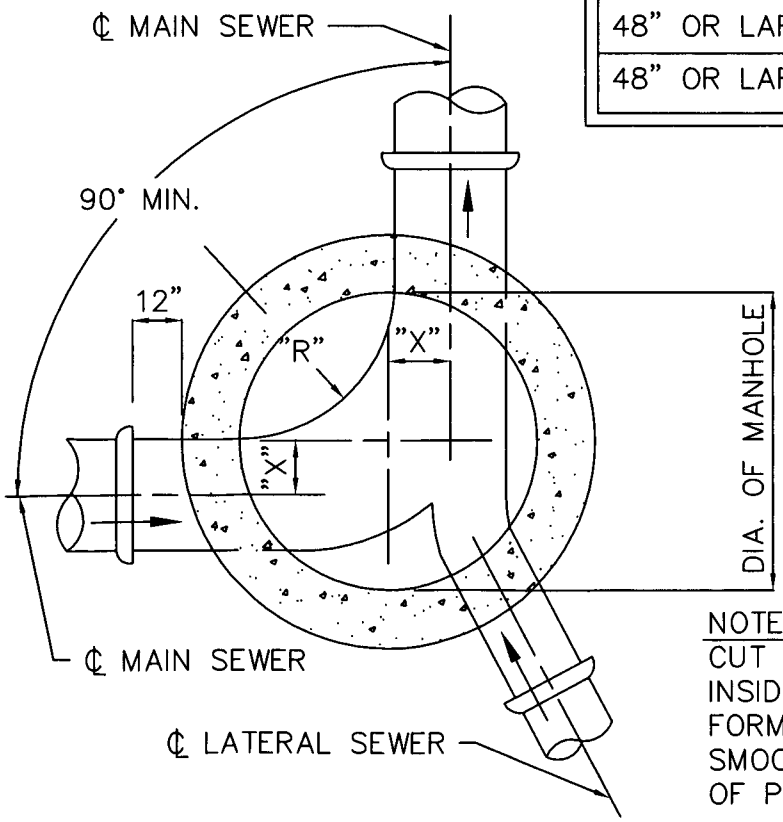

NOTE
CUT ALL PIPE FLUSH WITH INSIDE WALL OF MANHOLE FORM INVERT UNIFORM AND SMOOTH. CUT OFF TOP HALF OF PIPE AT WALL.

TYPICAL PLAN STANDARD MANHOLE

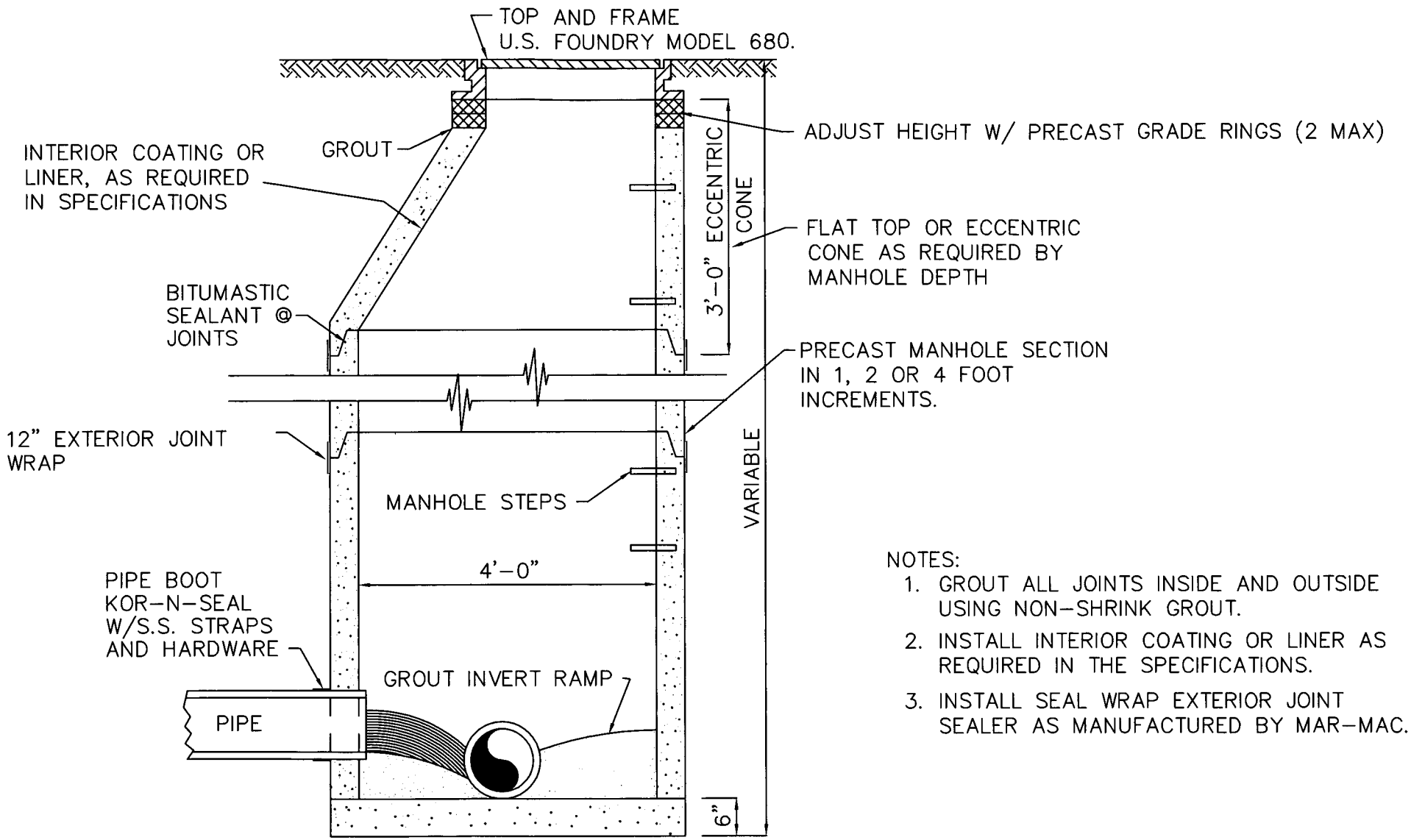

SECTION

NOTES:

1. GROUT ALL JOINTS INSIDE AND OUTSIDE USING NON-SHRINK GROUT.
2. INSTALL INTERIOR COATING OR LINER AS REQUIRED IN THE SPECIFICATIONS.
3. INSTALL SEAL WRAP EXTERIOR JOINT SEALER AS MANUFACTURED BY MAR-MAC.

PRECAST MANHOLE

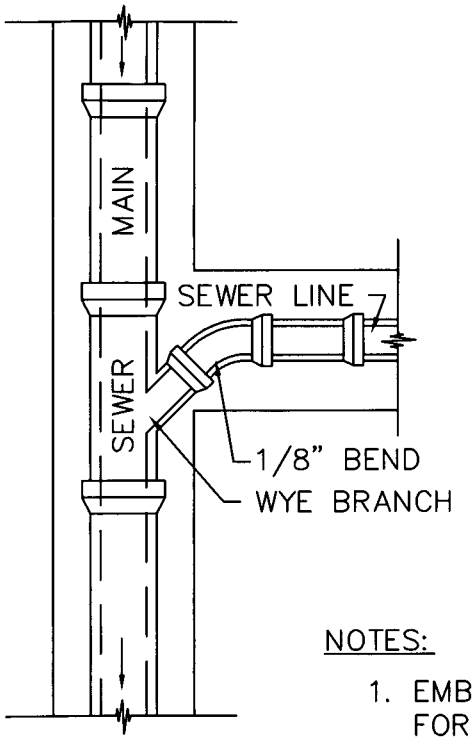

PLAN

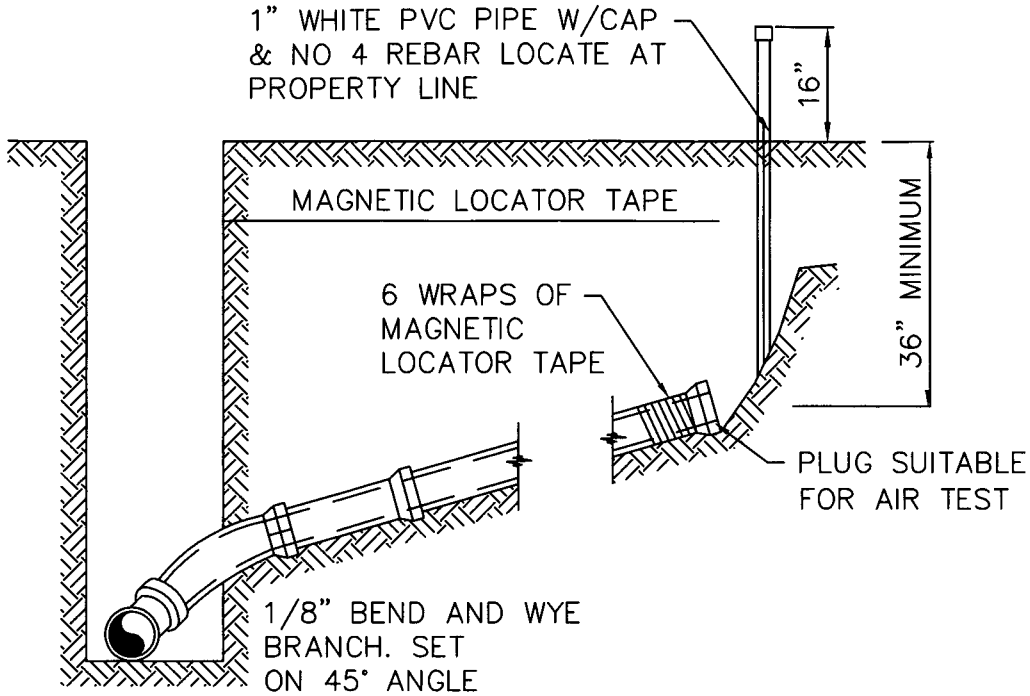

SECTION

NOTES:

1. EMBEDMENT SAME AS FOR SEWER LINE.
2. SERVICE LINE SHALL BE ON SUCH A GRADE THAT WILL PERMIT SERVICING OF PROPERTY. MINIMUM GRADE SHALL BE 1.0%. MAXIMUM GRADE SHALL BE 50%
3. NO VERTICAL STACKING WILL BE ALLOWED.

SEWER SERVICE CONNECTION DETAIL

NOT TO SCALE

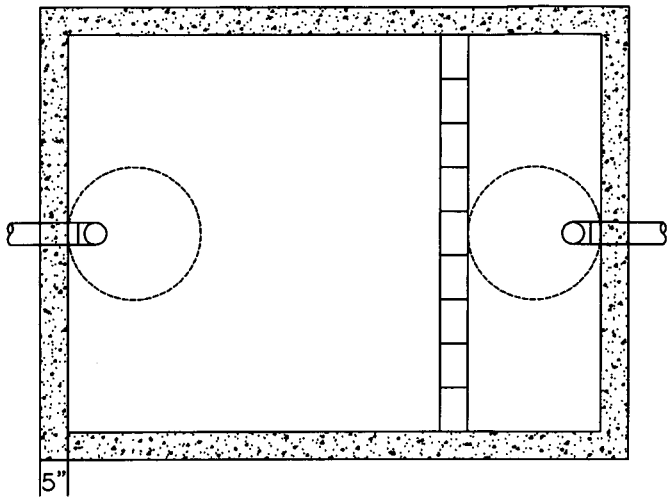

TOP SECTION VIEW

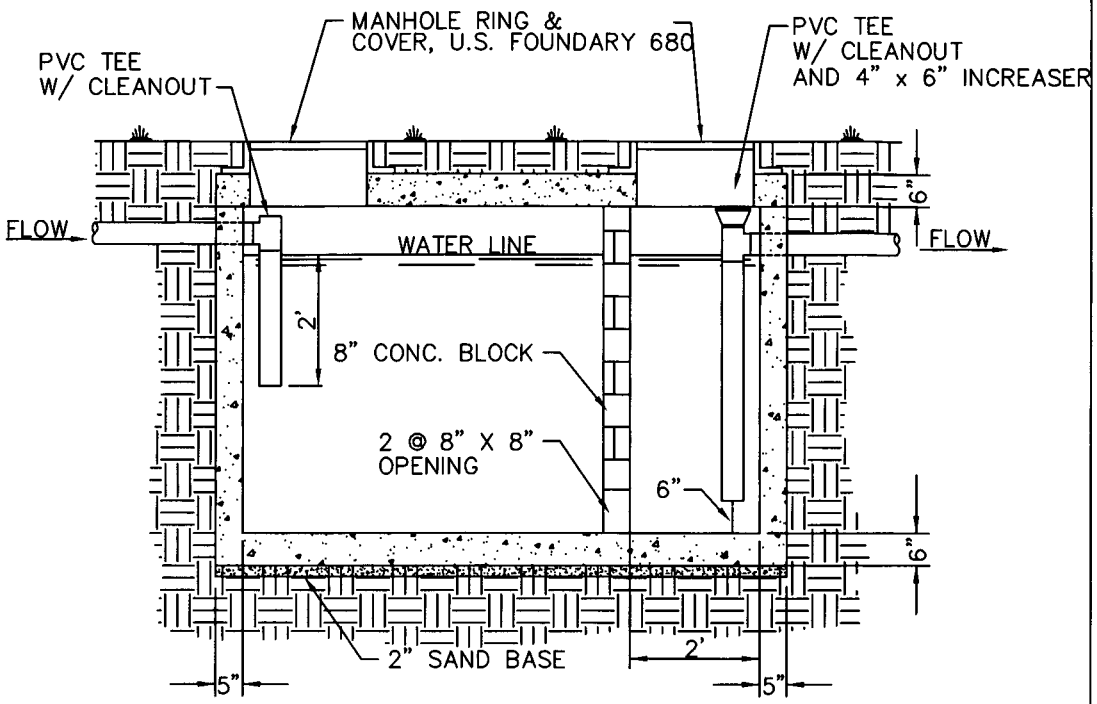

NOTES

1.) OUTLET 48" ABOVE BOTTOM OF TRAP AND INLET 2" ABOVE WATER LINE.

2.) FOR MAXIMUM WATER TIGHTNESS SEAL ALL CONCRETE SECTIONS WITH BUTYL SEALANT.

3.) COAT FRAMES AND COVERS WITH TWO SHOP COATS OF BITUMASTIC PAINT.

4.) CONCRETE: 4000 PSI MINIMUM

PRECAST INTERCEPTOR

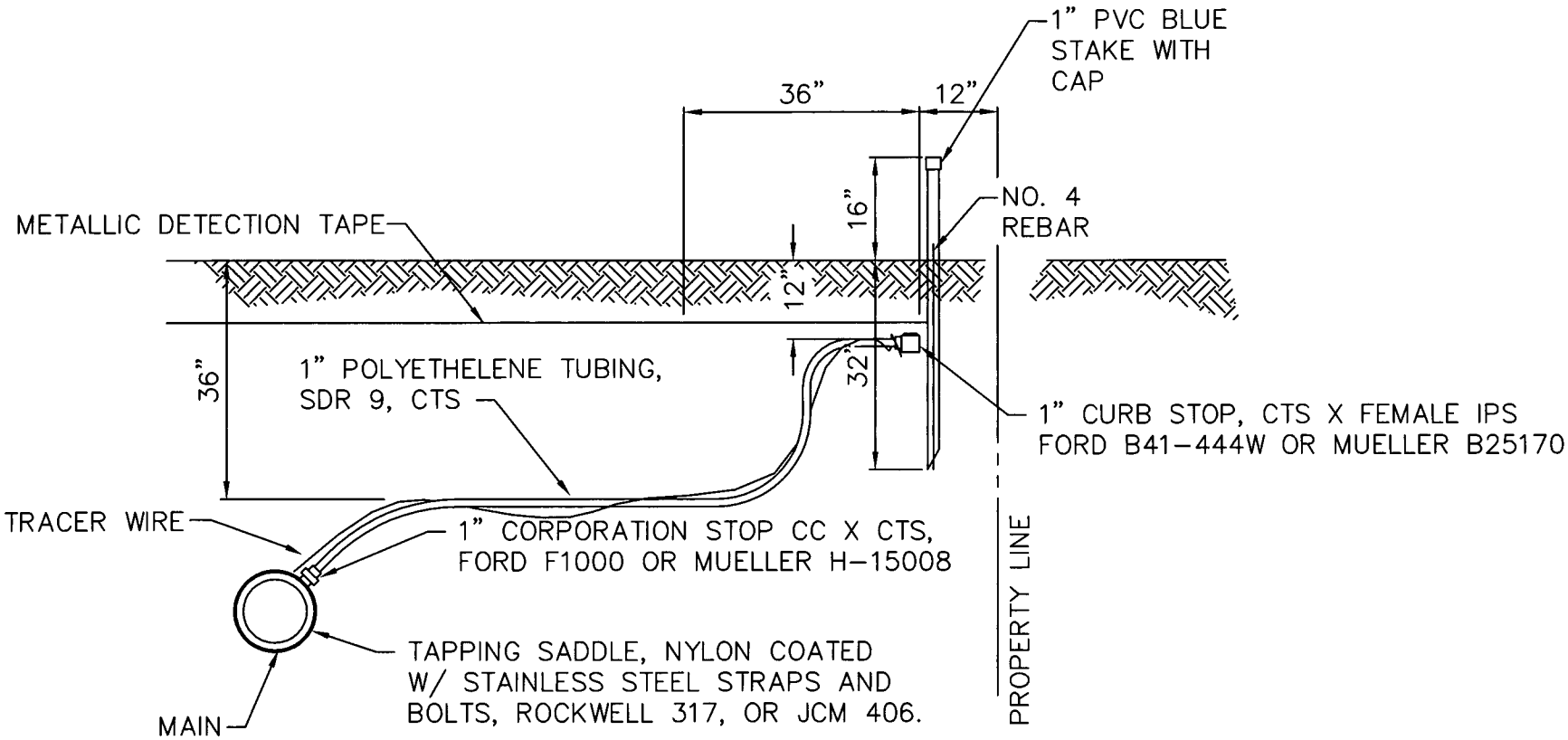

1" WATER SERVICE CONNECTION DETAIL

NOT TO SCALE

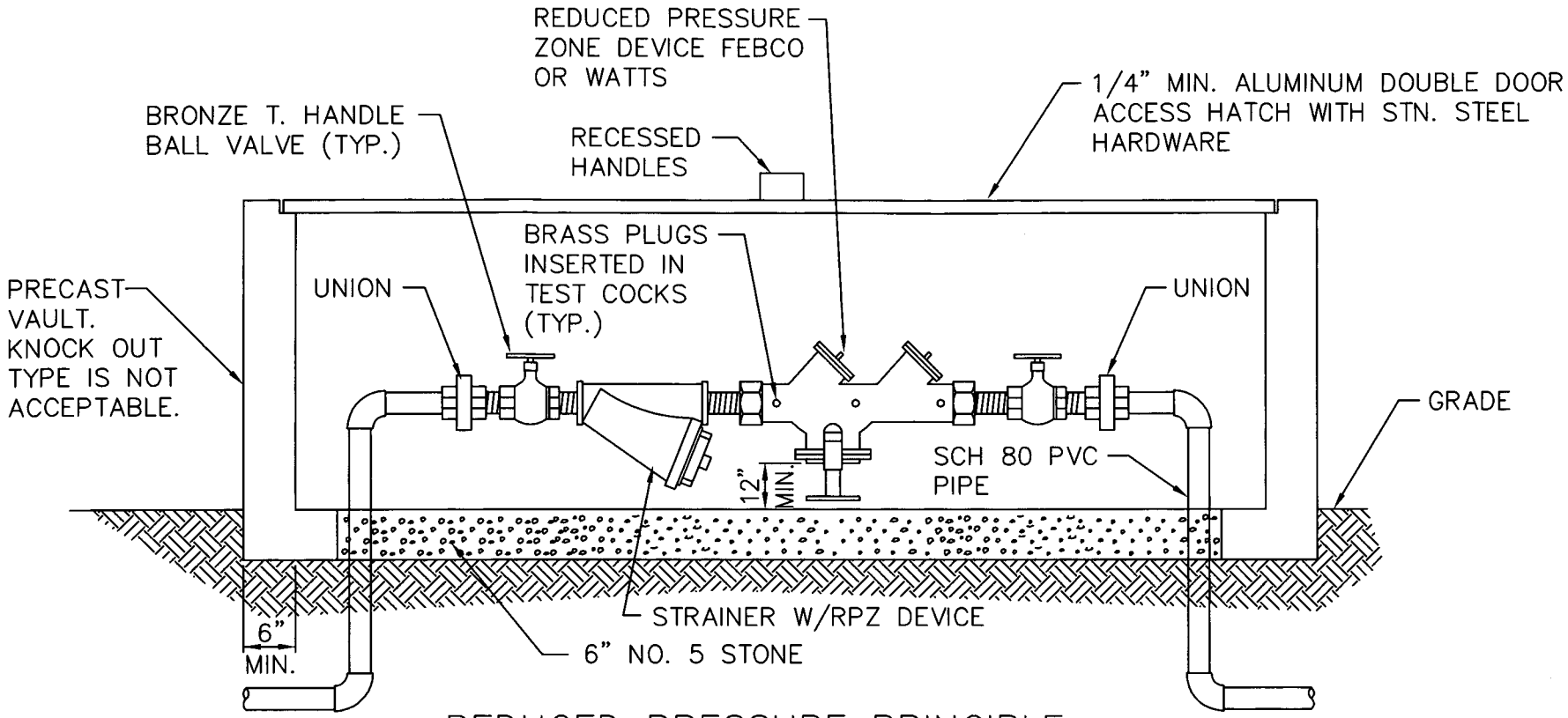

REDUCED PRESSURE PRINCIPLE BACKFLOW PREVENTOR – 2 1/2" AND SMALLER

NOT TO SCALE

NOTES:

1. MIN. WIDTH OF BOX 4' INSIDE.
2. POURED CONCRETE OR PRECAST CONCRETE BOX, KNOCK–OUT TYPE IS NOT ACCEPTABLE
3. WHERE A POSITIVE DRAIN (NO SURCHARGING) IS AVAILABLE, A FLOOR DRAIN WITH A 2" SLOPED CONCRETE BOTTOM MAY BE USED AND VAULT AND THE VAULT CAN BE INSTALLED WITH THE TOP 2" ABOVE GRADE.
4. IF SUBJECT TO TRAFFIC PROVIDE A HEAVIER DOOR.

REDUCED PRESSURE PRINCIPLE
BACKFLOW PREVENTOR – 2 1/2" AND SMALLER

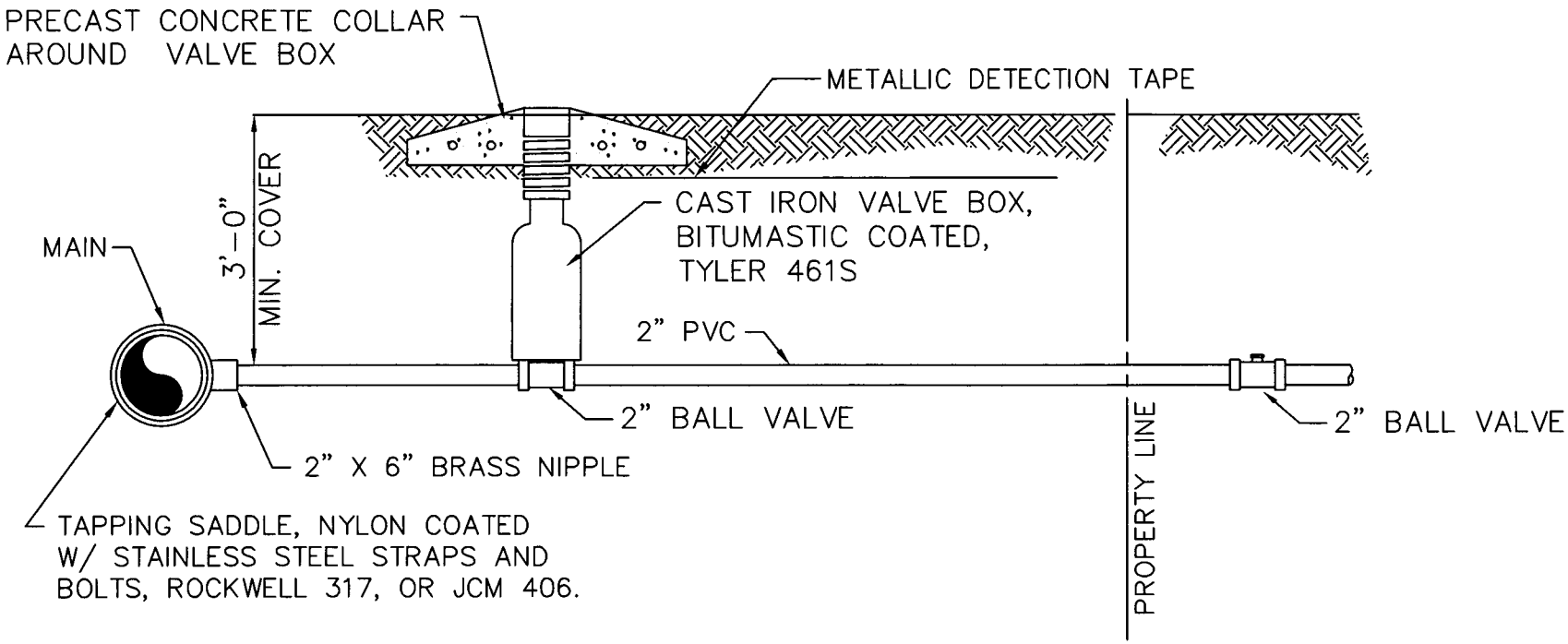

2" SERVICE CONNECTION DETAIL

NOT TO SCALE

2" SERVICE CONNECTION DETAIL

NOTE:

1.) ALL FIRE HYDRANT LEADS TO BE DUCTILE IRON WITH MECHANICAL JOINTS. HYDRANTS TO BE LOCATED 3' TO 10' BEHIND EDGE OF PAVEMENT OR 1' INSIDE RIGHT-OF-WAY AND ON PROPERTY LINE BETWEEN TWO LOTS. VERIFY LOCATION W/ TOWN STAFF. HYDRANT SHALL NOT BE WITHIN 10' OF SEWER SYSTEM.

2.) ALL FITTINGS SHALL BE MECHANICAL JOINTS AT TEES, GATE VALVES & FIRE HYDRANTS.

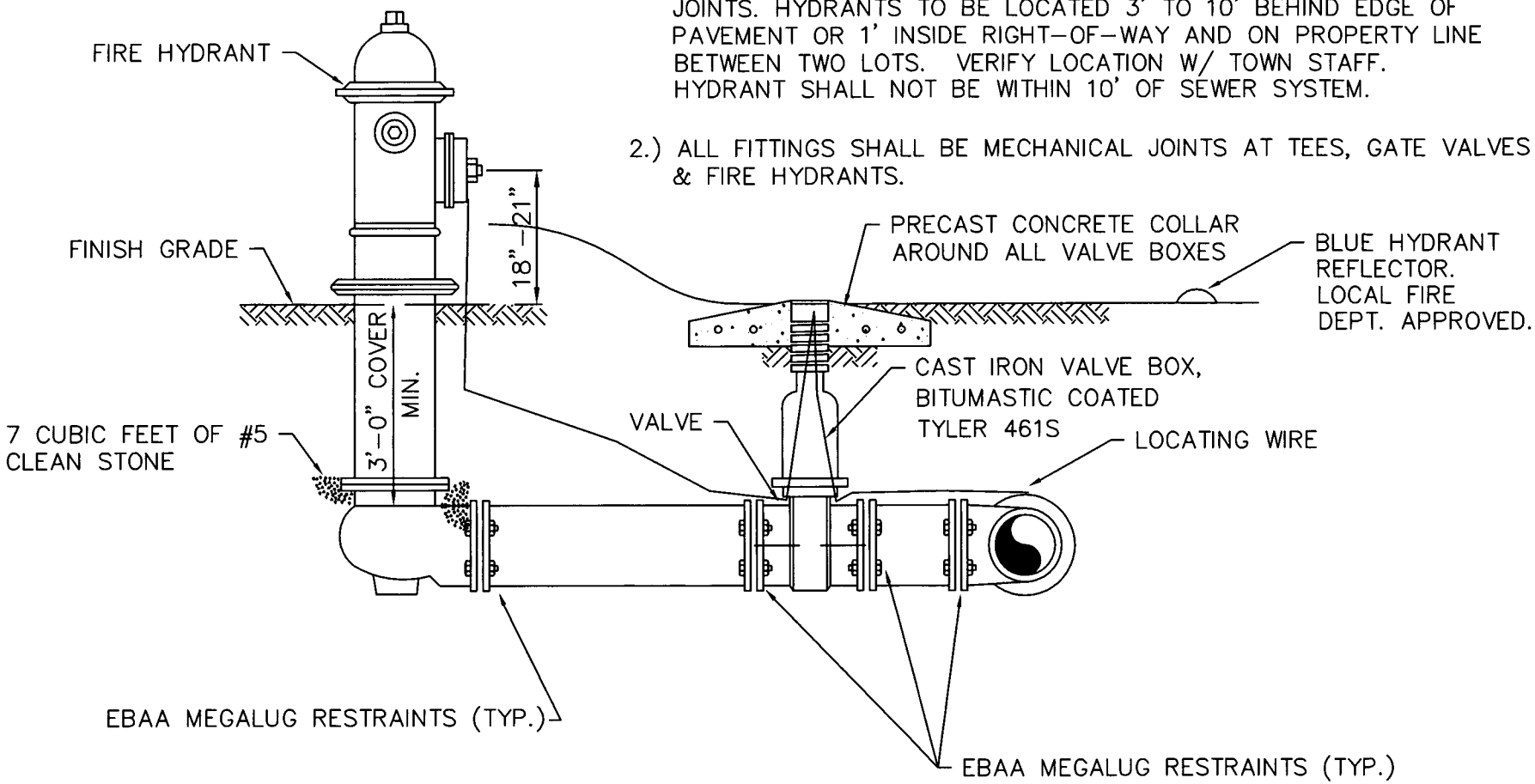

FIRE HYDRANT, VALVE & TEE SETTING

NOT TO SCALE

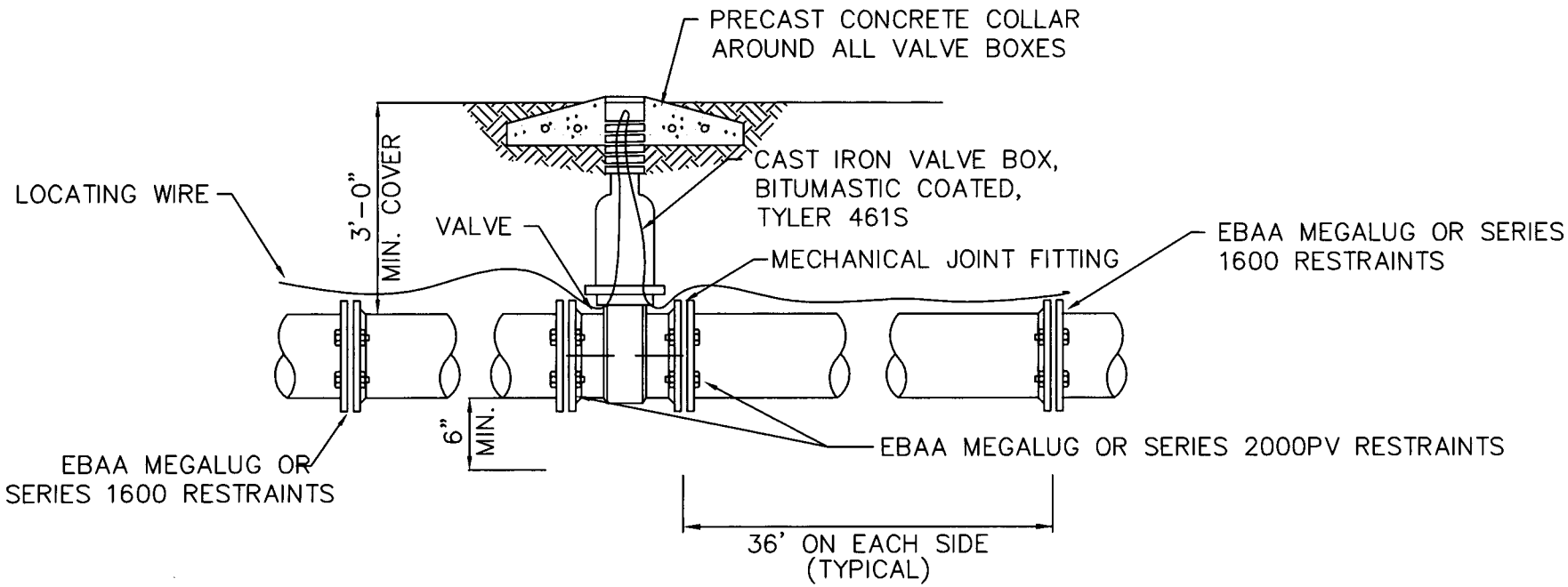

GATE VALVE SETTING DETAIL

NOT TO SCALE

GATE VALVE SETTING DETAIL

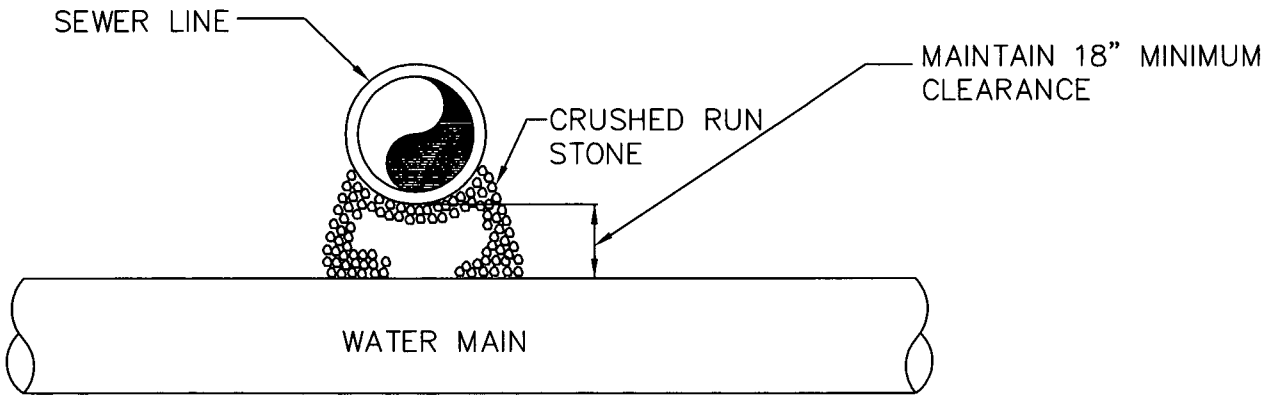

SEWER CROSSING ABOVE WATER LINE DETAIL

NOT TO SCALE

NOTE:
FULL JOINT OF DUCTILE IRON PIPE FOR BOTH WATER AND SEWER TO BE CENTERED AT CROSSING.

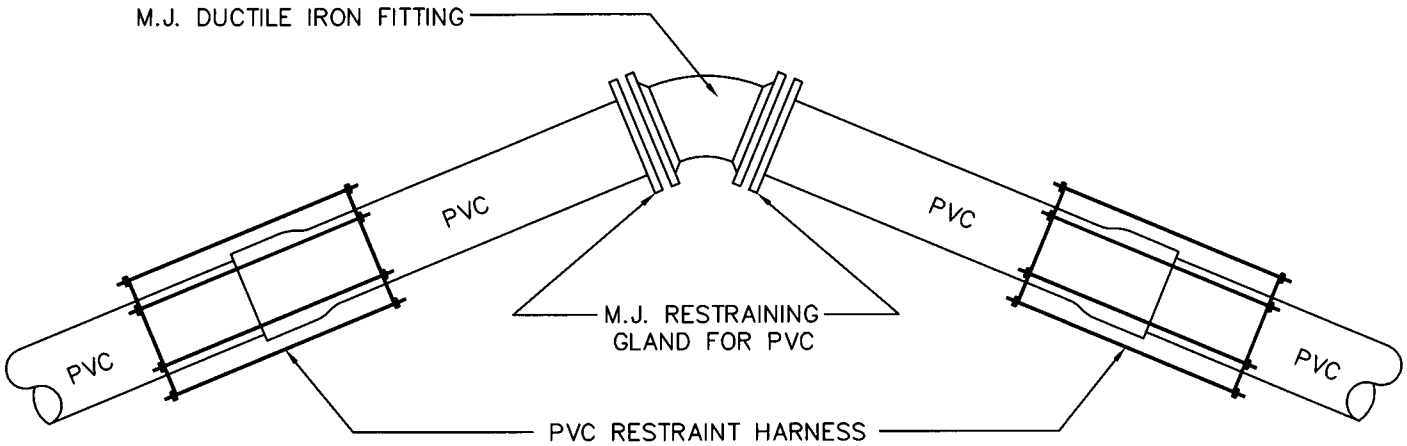

RESTRAINED JOINT FITTING DETAIL

NOT TO SCALE

RESTRAINED JOINT FITTING

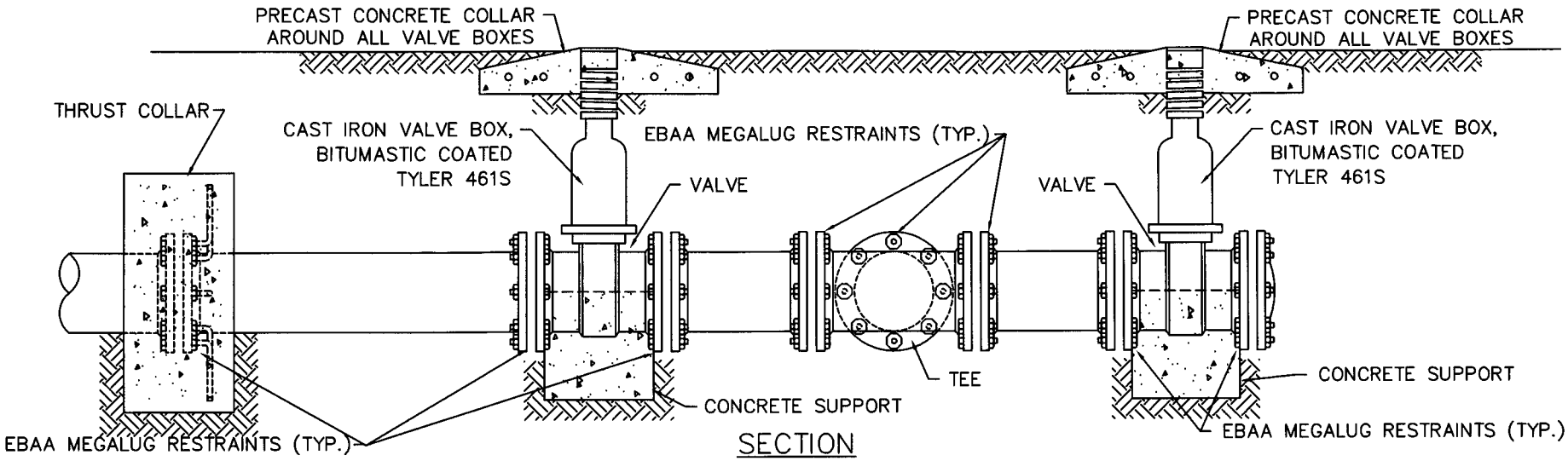

SECTION

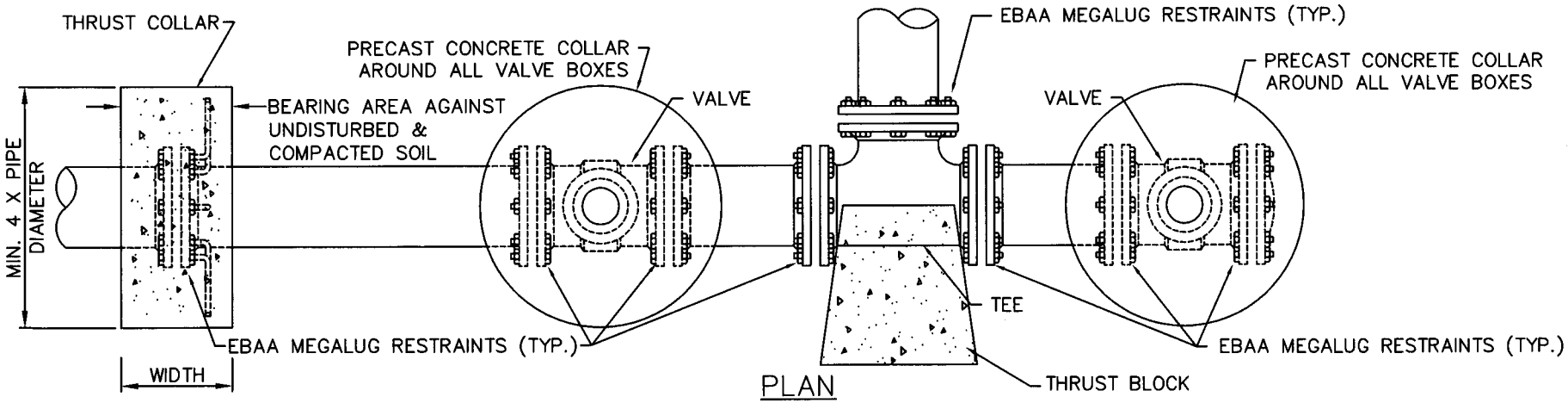

PLAN

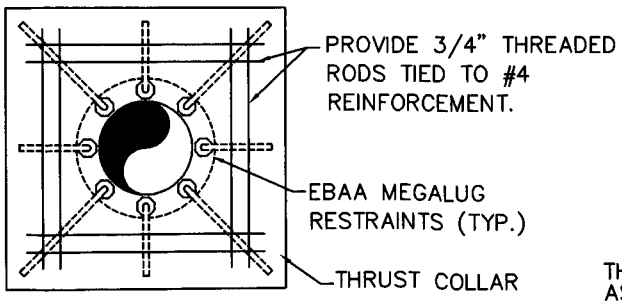

CROSS-SECTION

MINIMUM BLOCKING DIMENSIONS			
PIPE SIZE (inches)	BLOCKING BEARING AREA (Ft^2)	BLOCKING WIDTH (inches)	# THREADED RODS
4	2	24	4
6	4	24	4
8	7	36	6
10	11	36	6
12	15	36	6
OVER 12" BY THE DESIGN ENGINEER.			

THE MINIMUM DIMENSIONS TABLE IS BASED ON AN ASSUMED SOIL BEARING OF 2000 LBS. PER SQ. FT. IF BEARING VALUE FOR SOIL IS LESS, THEN AREA SHOWN HEREIN SHOULD BE INCREASED ACCORDINGLY.

THRUST COLLAR DETAIL

NOTE:

1.) ALL FITTINGS SHALL BE MECHANICAL JOINTS.

2.) TRACER WIRE SHALL BE LOOPED TO THE TOP OF THE VALVE BOX.

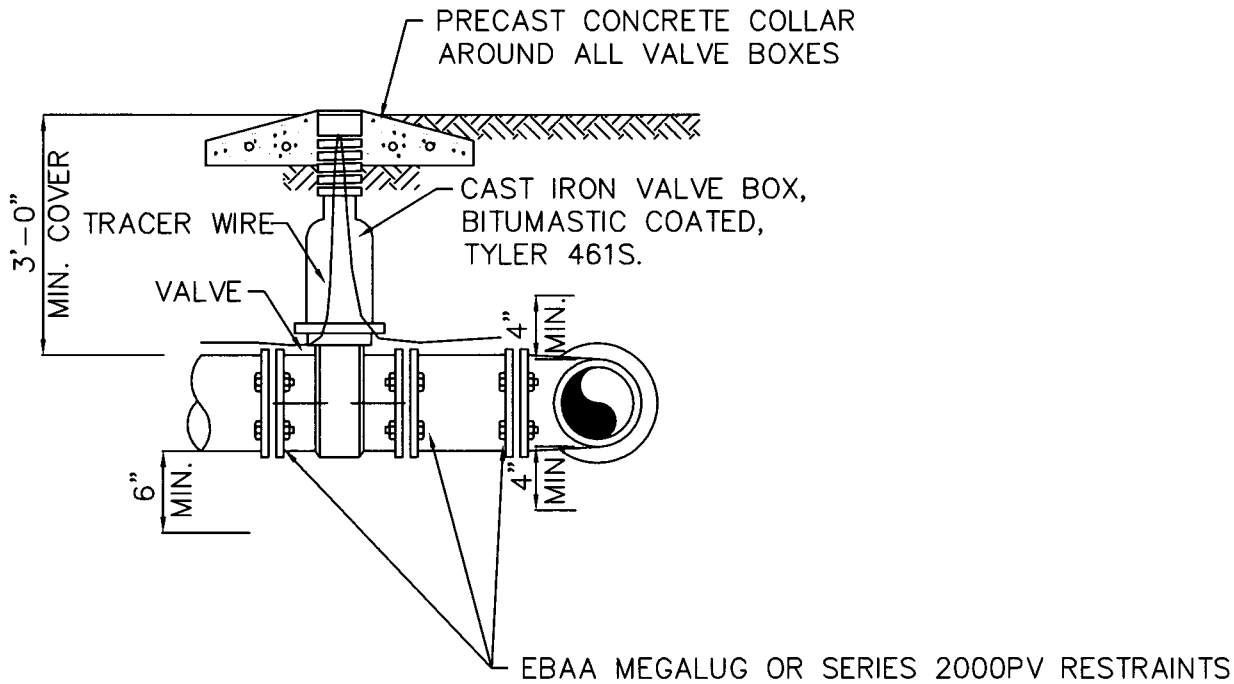

VALVE & TEE SETTING DETAIL

NOT TO SCALE

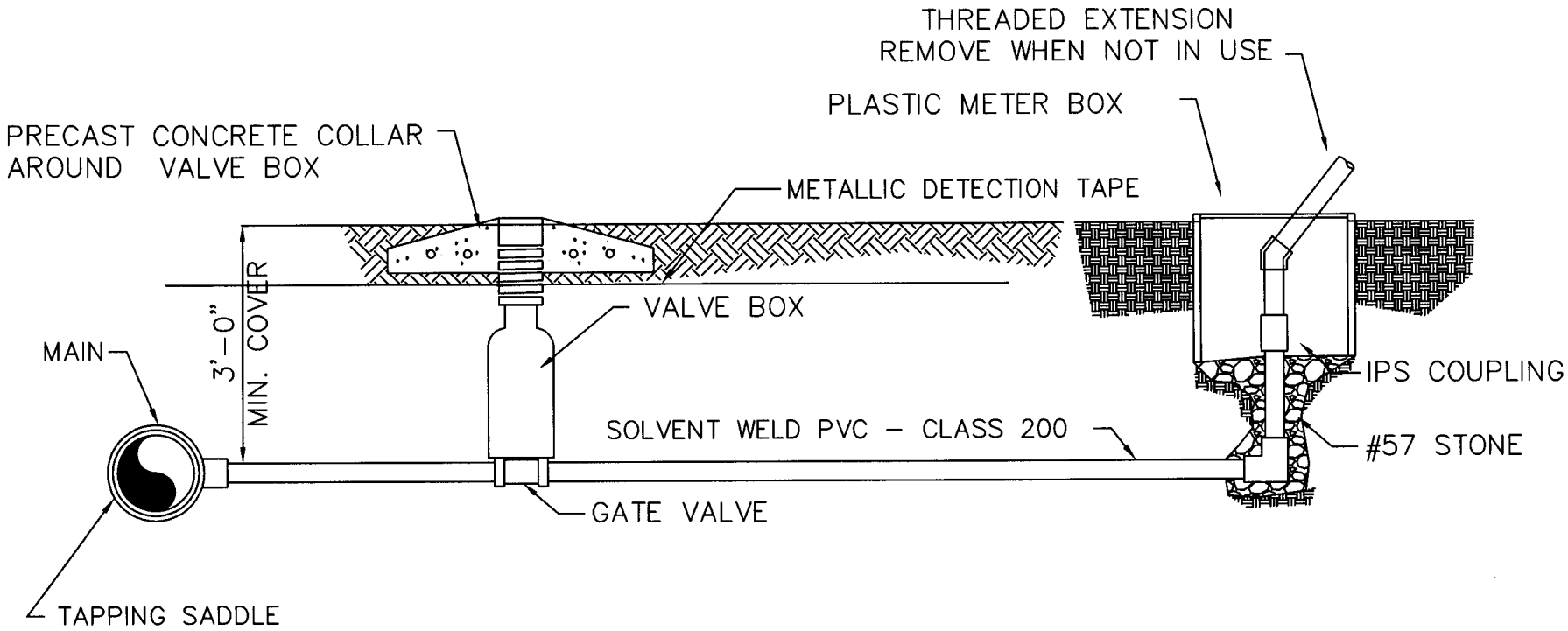

Pipe Diameter:	Minimum Flow Required:	Orifice Size:
2 inch	25 gpm	0.75 inch
2.5 inch	40 gpm	1 inch
3 inch	60 gpm	1.25 inch
4 inch	100 gpm	1.5 inch
6 inch	220 gpm	2 inch
8 inch	400 gpm	2.5 inch
10 inch	612 gpm	Fire Hydrant
12 inch	882 gpm	Fire Hydrant
14 inch	1200 gpm	Special Blow-off
16 inch	1570 gpm	Special Blow-off

WATER LINE BLOW-OFF

NOT TO SCALE

WATER LINE BLOW-OFF DETAIL